GÜDEL

Güdel Components GmbH
Carl-Benz-Strasse 5
63647 Altenstadt
Germany
Phone+49 6047 9639 0
components@de.gudel.com
gudel.com

EN | 01.22 | 10474553

GÜDEL

Gears & gearing parts – Extended product portfolio for drive technology

GÜDEL

Gears & gearing parts
– Extended product portfolio for drive technology

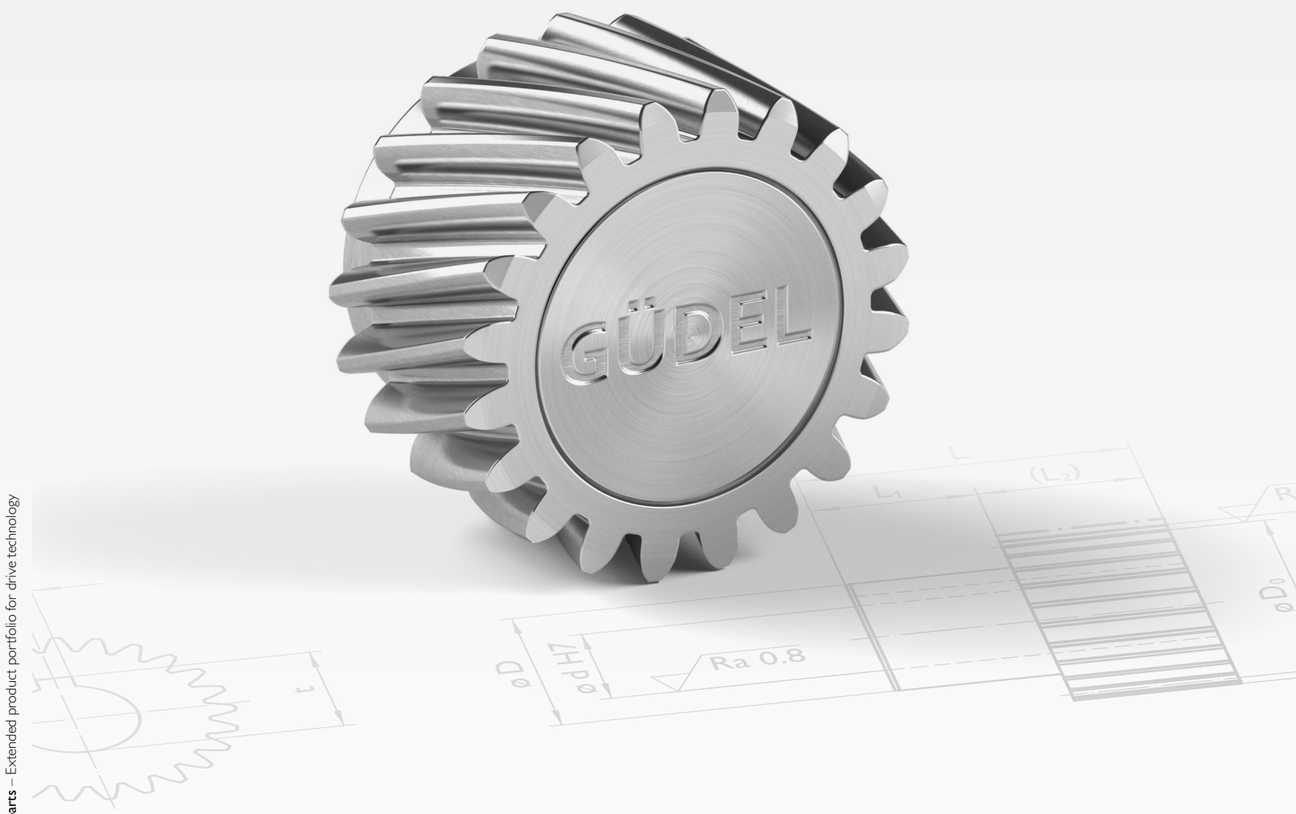

Pinions & shaft pinions | Spur gears | Worm gear sets | Bevel gears & bevel gear units | Racks

Gears & gearing parts
GÜDEL

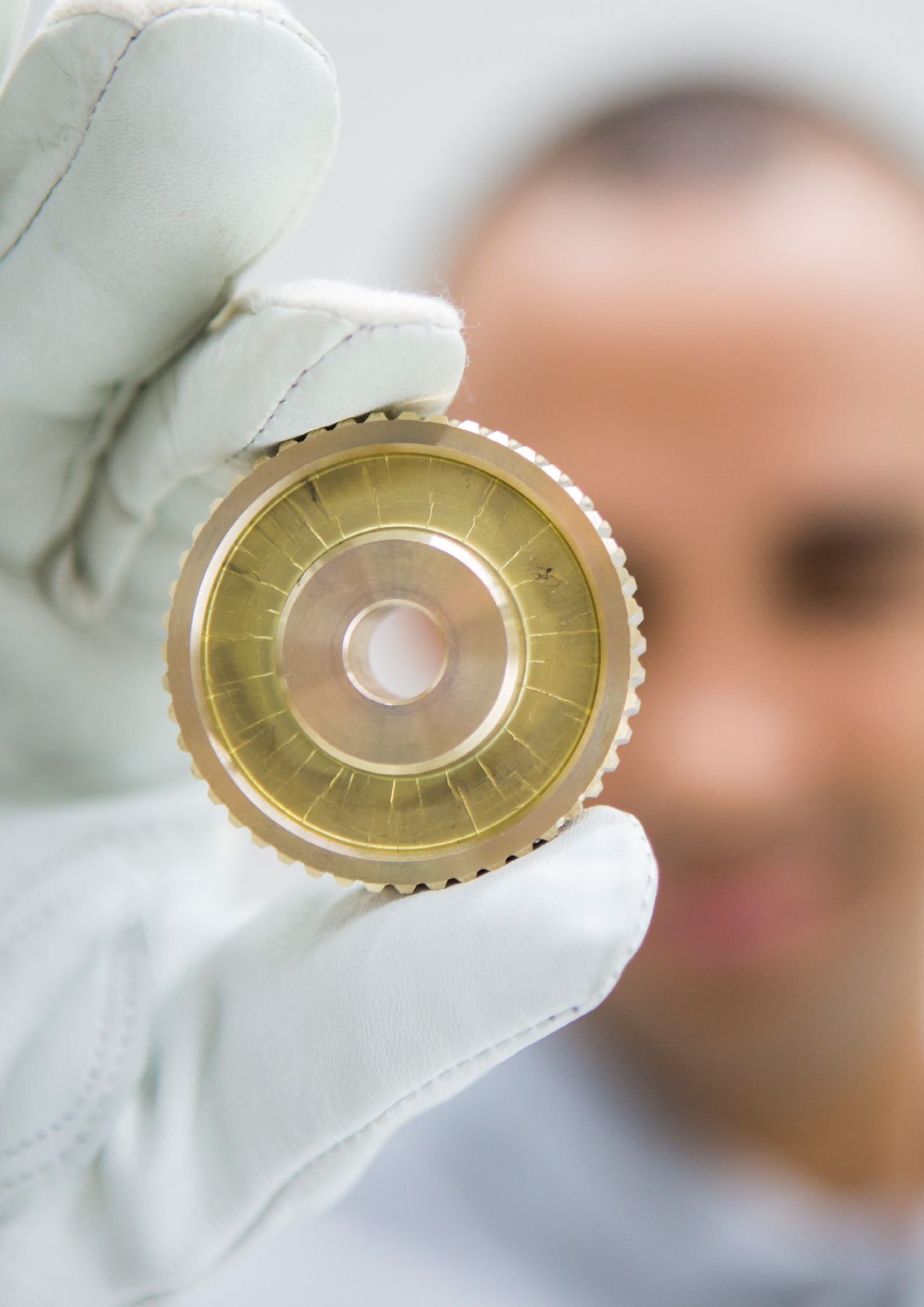

Contents

Product overview Customized pinions and racks 6

Range of services Individual processing options 8

Qualities Demand-oriented properties – quality according to your requirements 10

Pinions and shaft pinions

Drive pinions, straight toothed 14

Drive pinions, helical toothed 18

Shaft pinions 22

Measuring pinions, straight toothed 24

Spur gears and worm gear sets

Steel spur gears 28

Stainless steel spur gears 44

Hardened spur gears 46

Plastic spur gears with steel hub 48

Injection molded plastic spur gears 54

Worm gear sets 66

Bevel gears and bevel gearboxes

Straight toothed bevel gears 76

Stainless steel bevel gears 84

Plastic bevel gears 86

Brass bevel gears 88

Die cast zinc bevel gears 89

Injection molded plastic bevel gears 90

Angular drive 94

Racks

Racks 100

Güdel worldwide

Contacts 106

Customized pinions and racks

We offer our Made in Germany standard components in different qualities and materials. Of course, we also process them according to your wishes and instructions. In addition to our standard range shown here, we can also realize application-specific special designs according to your specifications. This means we manufacture the perfect product for your individual application.

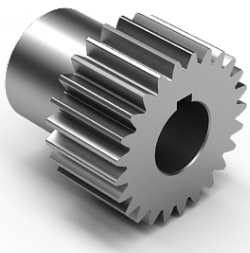

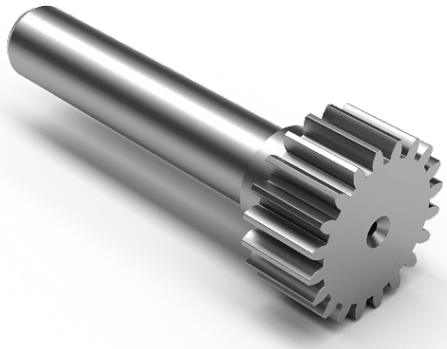

Individual processing possibilities according to your expectations:

Milling

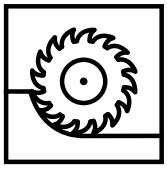

Turning

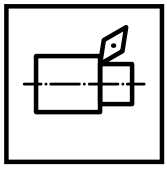

Drilling

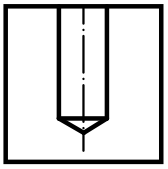

Hardening

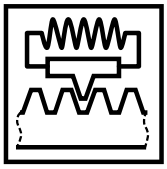

Grinding

Grooving

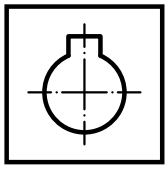

Thread

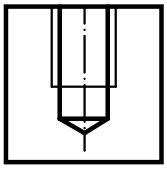

Surface treatment

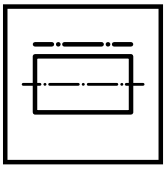

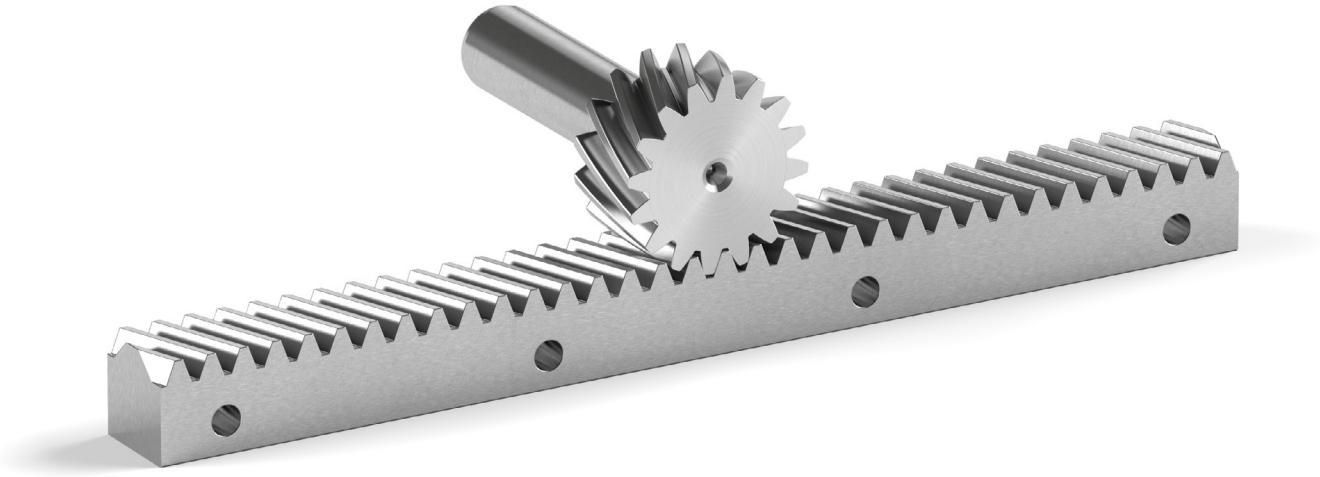

Send inquiries to: components@de.gudel.com

Our range of services

The Güdel Group is a manufacturer of high-precision machine components and a provider of sophisticated automation solutions. Its range of products stretches from linear guides, racks, pinions and gearboxes through to linear axes and gantry robots. Güdel ensures industrial automation flows by delivering intelligent motion solutions.

Güdel has many years of expertise in linear and drive technology. Güdel has been developing drive technology for versatile applications in a wide range of industries since 1960. This expertise guarantees the very highest quality and durability. The precision manufacturing with high-strength materials and cutting-edge hardening technology provides a convincing basis for cooperation.

At the Swiss headquarters in Langenthal and the Altenstadt site in Germany, we produce standard components and special solutions.

Everything from a single source

From its early beginnings to the present day, Güdel has displayed a unique vertical range of manufacture. Its extremely broad spectrum and overall competence as a solution provider is very impressive. This knowledge and our experience are constantly channeled into the development and production of the individual assemblies.

Demand-oriented properties – quality according to your requirements

With our standard program we cover four quality classes from Q6 to Q12. We harden and grind our class Q5 and Q6 products. We mill class Q7 products from alloyed quenched and tempered steel. We mill and harden class Q9 products.

We manufacture our racks and pinions from steel as standard. Racks can also be purchased in stainless steel or plastic to suit your application.

Qualities

Q6

Q8

Q9

Q12

Materials

Steel

Stainless steel

Plastic

Non-ferrous metal

Steel & plastic

Treatments

Milled

Hardened

Ground

Sprayed

Convex ground

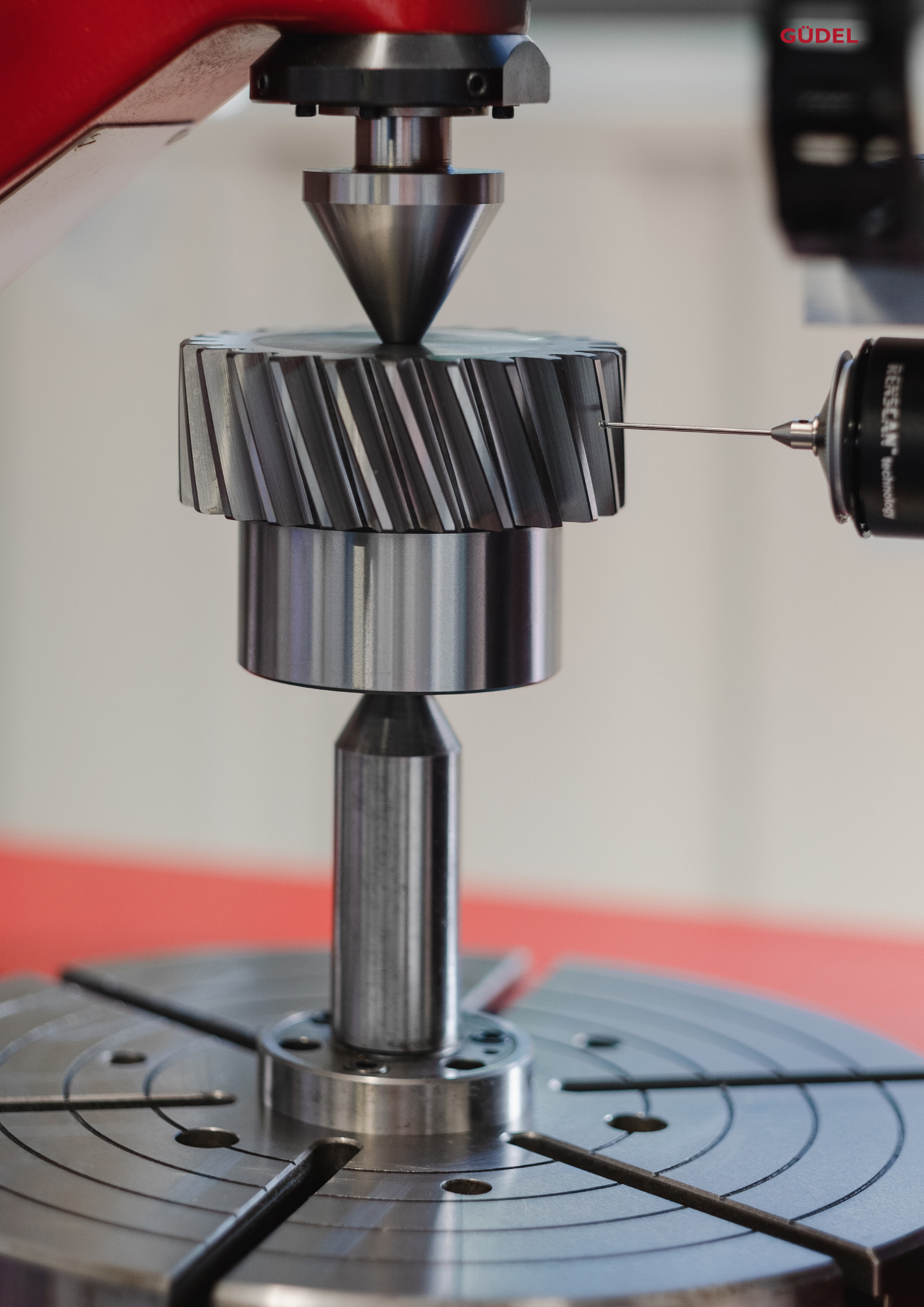
GÜDEL
RENISCAN technology

Pinions and shaft pinions

GÜDEL

Drive pinions, straight toothed with modular pitch

Hardened and ground

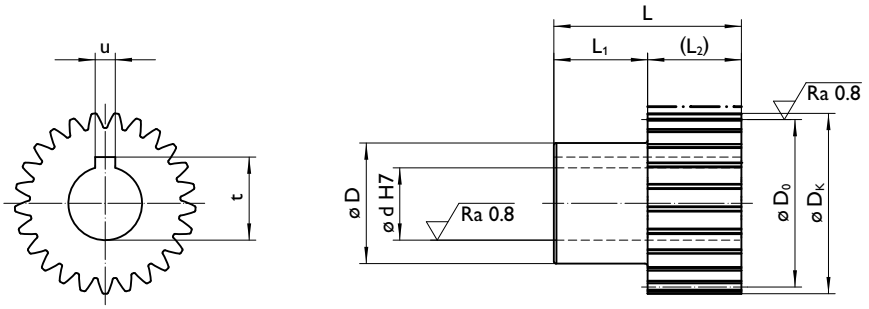

-·-·- hardened

Material
16MnCr5 DIN 1.7131

Toothing
Pressure angle α= 20°
straight toothed
hardened
and convex ground

Quality
6f24 DIN ISO1328 / DIN 3963/67

f_p [mm]
Pitch single deviation
Module ≤ 3; 0.006
Module > 3; 0.008

Geometric data

m_n	p_t	z	d	D_k	D_0	D	L	L_1	L_2	t	u	J	M	Art. no.
1.5	4.712	25	16	40.5	37.5	30	46	26	20	18.3	5	44	0.24	141501
1.5	4.712	32	22	51.0	48.0	36	48	28	20	24.8	6	109	0.36	141502
1.5	4.712	40	22	63.0	60.0	36	48	28	20	24.8	6	226	0.52	141503
2.0	6.283	25	16	54.0	50.0	30	54	26	28	18.3	5	147	0.49	142001
2.0	6.283	25	22	54.0	50.0	36	56	28	28	24.8	6	160	0.49	142002
2.0	6.283	28	30	60.0	56.0	50	60	32	28	33.3	8	327	0.70	142003
2.0	6.283	32	16	68.0	64.0	30	54	26	28	18.3	5	373	0.76	142004
2.0	6.283	32	22	68.0	64.0	36	56	28	28	24.8	6	386	0.76	142005
2.0	6.283	32	30	68.0	64.0	50	60	32	28	33.3	8	476	0.86	142006
2.0	6.283	32	32	68.0	64.0	55	65	37	28	35.3	10	567	0.98	142007
2.0	6.283	36	40	76.0	72.0	62	65	37	28	43.3	12	867	1.12	142008
2.0	6.283	40	32	84.0	80.0	55	65	37	28	35.3	10	1085	1.38	142009
2.0	6.283	40	40	84.0	80.0	62	65	37	28	43.3	12	1169	1.33	142010
2.0	6.283	40	45	84.0	80.0	68	65	37	28	48.8	14	1280	1.34	142011
2.0	6.283	50	45	104.0	100.0	68	65	37	28	48.8	14	2546	1.96	142012
2.5	7.854	22	22	60.0	55.0	36	56	28	28	24.8	6	222	0.58	142501
2.5	7.854	28	32	75.0	70.0	55	65	37	28	35.3	10	722	1.12	142502
2.5	7.854	36	40	95.0	90.0	62	65	37	28	43.3	12	1698	1.62	142503
3.0	9.425	22	22	72.0	66.0	36	56	28	28	24.8	6	433	0.80	143001
3.0	9.425	22	25	72.0	66.0	44	60	32	28	28.3	8	481	0.90	143002
3.0	9.425	22	30	72.0	66.0	50	60	32	28	33.3	8	523	0.91	143003
3.0	9.425	22	32	72.0	66.0	55	65	37	28	35.3	10	614	1.03	143004
3.0	9.425	22	35	72.0	66.0	55	65	37	28	38.3	10	591	0.95	143005
3.0	9.425	25	40	81.0	75.0	62	65	37	28	43.3	12	970	1.20	143006
3.0	9.425	28	22	90.0	84.0	36	56	28	28	24.8	6	1093	1.27	143007
3.0	9.425	28	25	90.0	84.0	44	60	32	28	28.3	8	1141	1.36	143008

m_n: Normal module, P_t: Circular pitch [mm], z: Number of teeth, J: Moment of inertia [10^{-6} kg^{m2}], M: Weight[kg]

Module
3.0 - 6.0

Drive pinion

Q6

Drive pinions, straight toothed with modular pitch

Hardened and ground

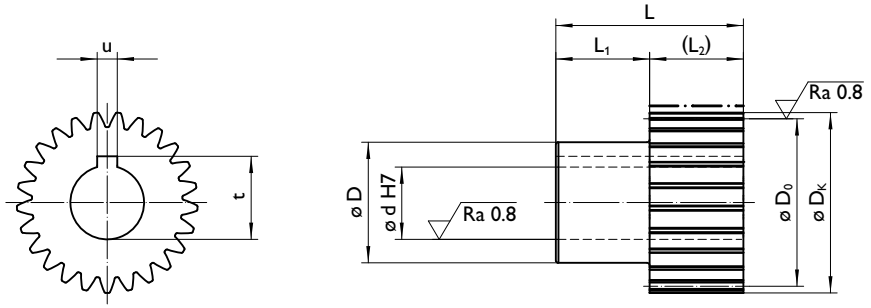

-·-·- hardened

Material
16MnCr5 DIN 1.7131

Toothing
Pressure angle α = 20°
straight toothed
hardened
and convex ground

Quality
6f24 DIN ISO 1328 / DIN 3963/67

f_p [mm]
Pitch single deviation
Module ≤ 3 ; 0.006
Modul > 3 ; 0.008

Geometric data

m_n	p_t	z	d	D_k	D_0	D	L	L_1	L_2	t	u	J	M	Art. No.
3.0	9.425	28	30	90	84	50	60	32	28	33.3	8	1183	1.37	143009
3.0	9.425	28	32	90	84	55	65	37	28	35.3	10	1275	1.49	143010
3.0	9.425	28	35	90	84	55	65	37	28	38.3	10	1252	1.41	143011
3.0	9.425	28	45	90	84	68	65	37	28	48.8	14	1469	1.45	143012
3.0	9.425	32	40	102	96	62	65	37	28	43.3	12	2112	1.82	143013
3.0	9.425	36	45	114	108	68	65	37	28	48.8	14	3319	2.24	143014
4.0	12.566	20	32	88	80	55	75	35	40	35.3	10	1440	1.75	144001
4.0	12.566	20	35	88	80	55	75	35	40	38.3	10	1414	1.65	144002
4.0	12.566	20	40	88	80	62	75	35	40	43.3	12	1504	1.66	144003
4.0	12.566	22	45	96	88	68	75	35	40	48.8	14	2174	1.96	144004
4.0	12.566	25	32	108	100	55	75	35	40	35.3	10	3248	2.63	144005
4.0	12.566	25	35	108	100	55	75	35	40	38.3	10	3222	2.54	144006
4.0	12.566	25	40	108	100	62	75	35	40	43.3	12	3312	2.54	144007
4.0	12.566	25	55	108	100	80	80	40	40	59.3	16	3757	2.54	144008
4.0	12.566	28	45	120	112	68	75	35	40	48.8	14	5157	3.13	144009
4.0	12.566	32	55	136	128	80	80	40	40	59.3	16	8916	4.10	14410
4.0	12.566	32	75	136	128	110	100	60	40	79.9	20	12526	5.02	144011
4.0	12.566	40	75	168	160	110	100	60	40	79.9	20	24378	7.27	144012
5.0	15.708	21	45	115	105	68	85	35	50	48.8	14	4960	3.31	145001
5.0	15.708	21	55	115	105	80	90	40	50	59.3	16	5278	3.28	145002
5.0	15.708	25	45	135	125	68	85	35	50	48.8	14	9654	4.72	145003
5.0	15.708	25	55	135	125	80	90	40	50	59.3	16	9972	4.69	145004
5.0	15.708	25	75	135	125	110	110	60	50	79.9	20	13409	5.44	145005
6.0	18.850	21	55	138	126	80	100	40	60	59.3	16	12134	5.55	146001
6.0	18.850	21	75	138	126	110	120	60	60	79.9	20	15400	6.15	146002
6.0	18.850	25	55	162	150	80	100	40	60	59.3	16	23814	7.99	146003
6.0	18.850	25	75	162	150	110	120	60	60	79.9	20	27079	8.58	146004

m_n: Normal module, P_t: Circular pitch [mm], z: Number of teeth, J: Moment of inertia [10^{-6} kg m^2], M: Weight[kg]

Drive pinions, straight toothed with modular pitch

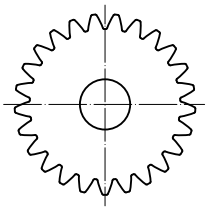

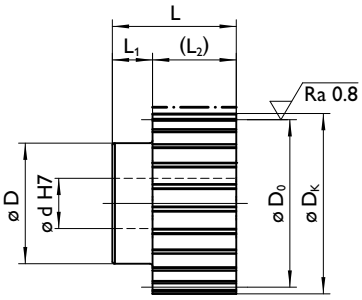

–·–· hardened

Hardened and ground

Material
16MnCr5 DIN 1.7131

Toothing
Pressure angle α = 20°
straight toothed
hardened
and convex ground

Quality
6f24 DIN ISO1328 / DIN 3963/67

f_p [mm]
Pitch single deviation
Module ≤ 3; 0.006
Module > 3; 0.008

Geometric data

m_n	P_t	z	d	D_k	D_0	D	L	L_1	L_2	J	M	Art. No.
1.5	4.712	20	10	33.0	30.0	25.0	28.0	8.0	20	15	0.12	254012
2.0	6.283	20	15	44.0	40.0	34.5	30.0	10.0	20	50	0.23	254022
2.5	7.854	20	15	55.0	50.0	40.0	37.0	12.0	25	142	0.45	254032
3.0	9.425	20	15	66.0	60.0	40.0	44.0	14.0	30	323	0.74	254042
4.0	12.566	20	30	88.0	80.0	65.0	59.0	19.0	40	1447	1.62	254052
5.0	15.708	20	40	110.0	100.0	85.0	70.0	20.0	50	4293	2.88	254062
6.0	18.850	20	50	132.0	120.0	104.0	100.0	40.0	60	12772	6.46	254072
8.0	25.133	20	50	176.0	160.0	120.0	130.0	50.0	80	47465	15.00	254082
10.0	31.416	20	50	220.0	200.0	150.0	150.0	50.0	100	141188	29.10	254092

m_n: Normal module, P_t: Circular pitch [mm], z: Number of teeth, J: Moment of inertia [10^{-6} kg m^2], M: Weight[kg]

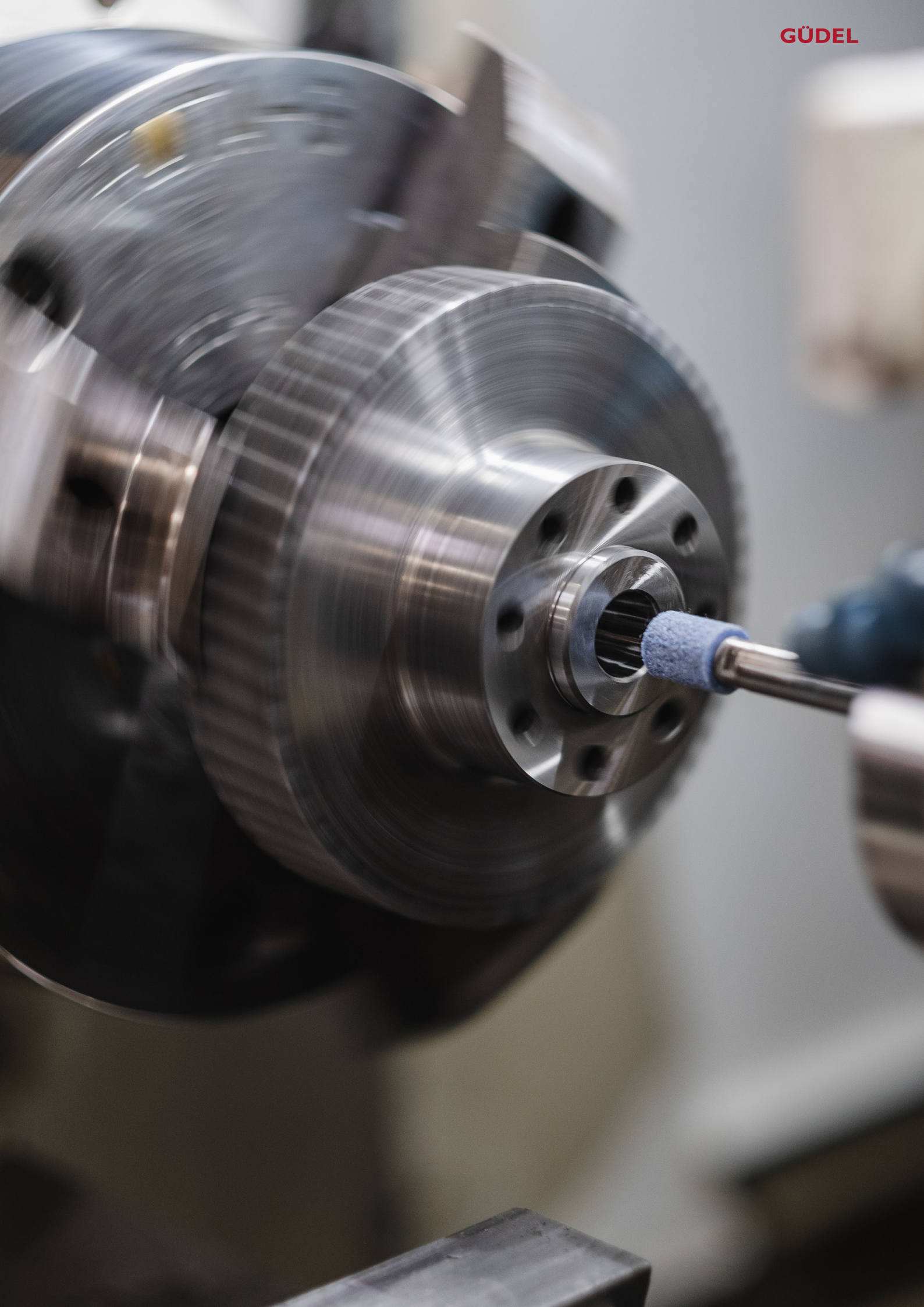
GÜDEL

Drive pinions, helical toothed with modular pitch

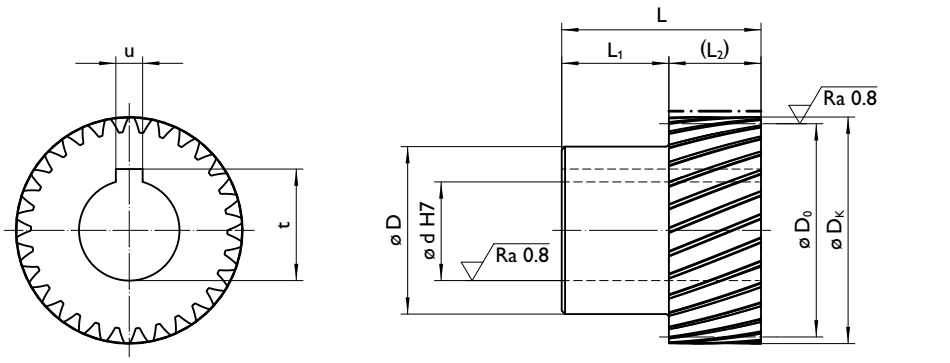

-·-·- hardened

Hardened and ground

Material
16MnCr5 DIN 1.7131

Toothing
Pressure angle α = 20°
helical toothed helix angle β = 19° 31' 41"
hardened
and convex ground

Quality
6f24 DIN ISO 1328 / DIN 3963/67

f_p [mm]
Pitch single deviation
Module ≤ 3; 0.006
Module > 3; 0.008

Geometric data

m_n	P_n	p_t	z	d_1	D_k	D_0	D	L	L_1	L_2	t	u	J	M	Art. No.
1.5	4.712	5.000	21	16	36.42	33.423	30	46	26	20	18.3	5	33	0.21	141551
1.5	4.712	5.000	30	22	50.75	47.747	36	48	28	20	24.8	6	107	0.36	141552
1.5	4.712	5.000	39	22	65.07	62.071	36	48	28	20	24.8	6	255	0.55	141553
2.0	6.283	6.667	21	22	48.56	44.563	36	56	28	28	24.8	6	111	0.40	142051
2.0	6.283	6.667	30	22	67.66	63.662	36	56	28	28	24.8	6	378	0.75	142052
2.0	6.283	6.667	30	30	67.66	63.662	50	60	32	28	33.3	8	468	0.85	142053
2.0	6.283	6.667	30	32	67.66	63.662	55	65	37	28	35.3	10	559	0.97	142054
2.0	6.283	6.667	39	32	86.76	82.761	55	65	37	28	35.3	10	1213	1.45	142055
2.5	7.854	8.333	20	22	58.05	53.052	36	56	28	28	24.8	6	196	0.54	142551
2.5	7.854	8.333	25	22	71.31	66.315	36	56	28	28	24.8	6	441	0.81	142552
2.5	7.854	8.333	25	32	71.31	66.315	55	65	37	28	35.3	10	622	1.03	142553
3.0	9.425	10.000	20	22	69.66	63.662	36	56	28	28	24.8	6	378	0.75	143051
3.0	9.425	10.000	20	25	69.66	63.662	44	60	32	28	28.3	8	426	0.84	143052
3.0	9.425	10.000	20	30	69.66	63.662	50	60	32	28	33.3	8	468	0.85	143053
3.0	9.425	10.000	20	32	69.66	63.662	55	65	37	28	35.3	10	559	0.97	143054
3.0	9.425	10.000	25	22	85.58	79.578	36	56	28	28	24.8	6	886	1.14	143055
3.0	9.425	10.000	25	25	85.58	79.578	44	60	32	28	28.3	8	934	1.24	143056
3.0	9.425	10.000	25	30	85.58	79.578	50	60	32	28	33.3	8	976	1.25	143057
3.0	9.425	10.000	25	32	85.58	79.578	55	65	37	28	35.3	10	1067	1.36	143058
3.0	9.425	10.000	25	35	85.58	79.578	55	65	37	28	38.3	10	1044	1.28	143059

m_n: Normal module, P_t: Circular pitch [mm], z: Number of teeth, J: Moment of inertia [10^{-6} kg m^2], M: Weight [kg]

Module
4.0 - 8.0

Drive pinions

Q6

Drive pinions, helical toothed with modular pitch

Hardened and ground

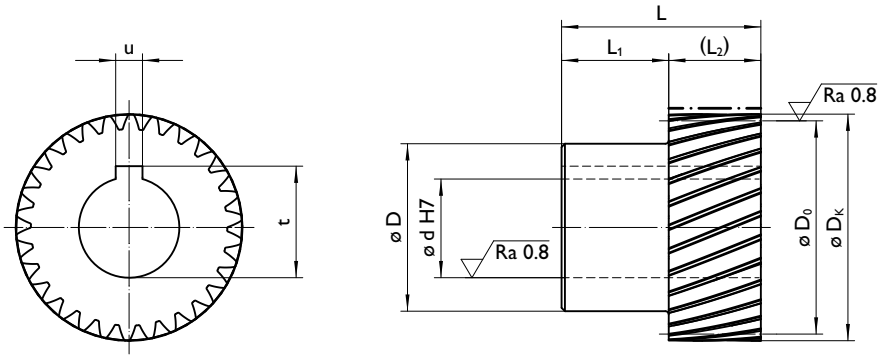

-·-·- hardened

Material
16MnCr5 DIN 1.7131

Toothing
Pressure angle α = 20°
helical toothed helix angle β = 19° 31' 41"
hardened
and convex ground

Quality
6f24 DIN ISO 1328 / DIN 3963/67

f_p [mm]
Pitch single deviation
Module ≤ 3; 0.006
Module > 3; 0.008

Geometric data

m_n	P_n	p_t	z	d_1	D_k	D_0	D	L	L_1	L_2	t	u	J	M	Art. No.
4.0	12.566	13.333	18	32	84.39	76.394	55	75	35	40	35.3	10	1228	1.61	144051
4.0	12.566	13.333	21	32	97.13	89.127	55	75	35	40	35.3	10	2118	2.12	144052
4.0	12.566	13.333	21	35	97.13	89.127	55	75	35	40	38.3	10	2092	2.03	144053
4.0	12.566	13.333	21	40	97.13	89.127	62	75	35	40	43.3	12	2182	2.04	144054
4.0	1 2.566	13.333	21	45	97.13	89.127	68	75	35	40	48.8	14	2270	2.01	144055
4.0	12.566	13.333	24	32	109.86	101.859	55	75	35	40	35.3	10	3482	2.72	144056
4.0	12.566	13.333	24	35	109.86	101.859	55	75	35	40	38.3	10	3456	2.63	144057
4.0	12.566	13.333	24	40	109.86	101.859	62	75	35	40	43.3	12	3546	2.63	144058
4.0	12.566	13.333	24	45	109.86	101.859	68	75	35	40	48.8	14	3635	2.60	144059
4.0	12.566	13.333	24	55	109.86	101.859	80	80	40	40	59.3	16	3991	2.63	144060
5.0	15.708	16.667	18	45	105.49	95.493	68	85	35	50	48.8	14	3490	2.73	145051
5.0	15.708	16.667	24	45	137.32	127.324	68	85	35	50	48.8	14	10369	4.90	145052
5.0	15.708	16.667	24	55	137.32	127.324	80	90	40	50	59.3	16	10687	4.87	145053
5.0	15.708	16.667	24	75	137.32	127.324	110	110	60	50	79.9	20	14124	5.62	145054
6.0	18.850	20.000	20	55	139.32	127.324	80	100	40	60	59.3	16	12629	5.67	146051
6.0	18.850	20.000	20	75	139.32	127.324	110	120	60	60	79.9	20	15894	6.27	146052
6.0	18.850	20.000	25	55	171.16	159.155	80	100	40	60	59.3	16	30034	9.03	146053
6.0	18.850	20.000	25	75	171.16	159.155	110	120	60	60	79.9	20	33300	9.62	146054
8.0	25.133	26.667	18	75	168.79	152.789	110	140	60	80	79.9	20	36720	11.06	148051

m_n: Normal module, P_t: Circular pitch [mm], z: Number of teeth, J: Moment of inertia [10^{-6} kg m^2], M: Weight [kg]

Drive pinions, helical toothed with modular pitch

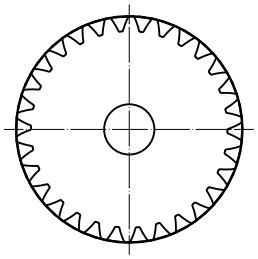

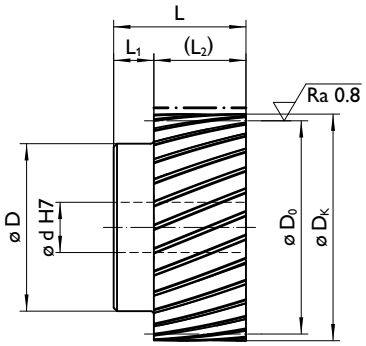

–·–· hardened

Hardened and ground

Material
16MnCr5 DIN 1.7131

Toothing
Pressure angle α = 20°
helical toothed helix angle β = 19° 31' 41''
hardened
and convex ground

Quality
6f24 DIN ISO 1328 / DIN 3963/67

f_p [mm]
Pitch single deviation
Module ≤ 3; 0.006
Module > 3; 0.008

Geometric data

m_n	P_n	p_t	z	d	D_k	D_0	D	L	L_1	L_2	J	M	Art. No.
1.5	4.712	5.00	20	10	34.83	31.83	25.0	28.0	8.0	20	18	0.14	254512
2.0	6.283	6.67	20	15	46.44	42.44	35.0	30.0	10.0	20	60	0.25	254522
2.5	7.854	8.33	20	15	58.05	53.05	40.0	37.0	12.0	25	174	0.50	254532
3.0	9.425	10.00	20	15	69.66	63.66	40.0	44.0	14.0	30	403	0.82	254542
4.0	12.566	13.33	20	30	92.88	84.88	65.0	59.0	19.0	40	1782	1.81	254552
5.0	15.708	16.66	20	40	116.10	106.10	85.0	70.0	20.0	50	5317	3.26	254562
6.0	18.850	20.00	20	50	139.30	127.32	105.0	100.0	40.0	60	15310	7.13	254572
8.0	25.133	26.66	20	50	185.70	169.76	120.0	130.0	50.0	80	58243	16.60	254582
10.0	31.416	33.33	20	50	232.20	212.21	150.0	150.0	50.0	100	173931	32.18	254592

m_n: Normal module, P_t: Circular pitch [mm], z: Number of teeth, J: Moment of inertia [10^{-6} kg m^2], M: Weight [kg]

Module
1.5 - 10.0

Drive pinions

Q6

Drive pinions, helical toothed with modular pitch

Hardened and ground

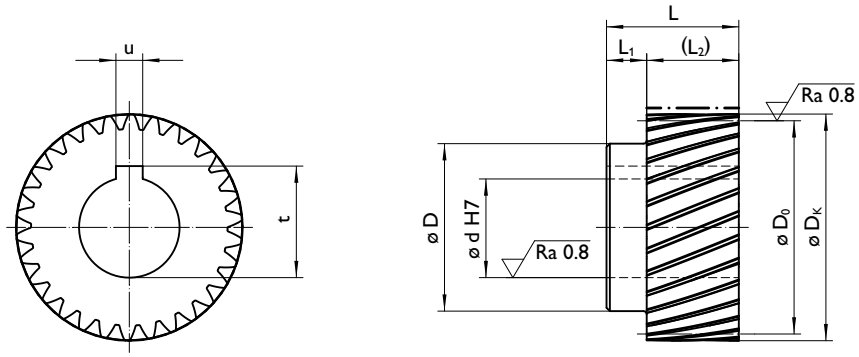

-·-·- hardened

Material
16MnCr5 DIN 1.7131

Toothing
Pressure angle α = 20°
helical toothed helix angle β = 19° 31' 41"
hardened
and convex ground

Quality
6f24 DIN ISO 1328 / DIN 3963/67

f_p [mm]
Pitch single deviation
Module ≤ 3; 0.006
Module > 3; 0.008

Geometric data

m_n	P_n	p_t	z	d	D_k	D_0	D	L	L_1	L_2	t	u	J	M	Art. No.
1.5	4.712	5	20	11	34.83	31.831	25	28	8	20	12.8	4	18	0.13	254513
1.5	4.712	5	20	14	34.83	31.831	25	28	8	20	16.3	5	17	0.12	254514
1.5	4.712	5	20	16	34.83	31.831	25	28	8	20	18.3	5	17	0.11	254515
2.0	6.283	62/3	20	16	46.44	42.441	35	30	10	20	18.3	5	60	0.25	254523
2.0	6.283	62/3	20	22	46.44	42.441	35	30	10	20	24.8	6	56	0.21	254524
2.0	6.283	62/3	20	25	46.44	42.441	35	30	10	20	28.3	8	52	0.18	254525
2.5	7.854	81/3	20	22	58.05	53.052	40	37	12	25	24.8	6	169	0.44	254533
2.5	7.854	81/3	20	25	58.05	53.052	40	37	12	25	28.3	8	164	0.41	254534
2.5	7.854	81/3	20	30	58.05	53.052	40	37	12	25	33.3	8	152	0.34	254535
3.0	9.425	10	20	22	69.66	63.662	40	44	14	30	24.8	6	397	0.75	254543
3.0	9.425	10	20	25	69.66	63.662	40	44	14	30	28.3	8	392	0.71	254544
3.0	9.425	10	20	30	69.66	63.662	40	44	14	30	33.3	8	377	0.64	254545
4.0	12.566	131/3	20	32	92.88	84.883	65	59	19	40	35.3	10	1802	1.89	254553
4.0	12.566	131/3	20	35	92.88	84.883	65	59	19	40	38.3	10	1782	1.81	254554
4.0	12.566	131/3	20	40	92.88	84.883	65	59	19	40	43.3	12	1734	1.68	254555
5.0	15.708	162/3	20	40	116.10	106.103	85	70	20	50	43.3	12	5515	3.65	254563
5.0	15.708	162/3	20	45	116.10	106.103	85	70	20	50	48.8	14	5432	3.47	254564
5.0	15.708	162/3	20	55	116.10	106.103	85	70	20	50	59.3	16	5162	3.04	254565
6.0	18.850	20	20	55	139.32	127.324	105	100	40	60	59.3	16	15097	6.81	254573
6.0	18.850	20	20	75	139.32	127.324	105	100	40	60	79.9	20	13375	5.21	254574
6.0	18.850	20	20	85	139.32	127.324	105	100	40	60	90.4	22	11801	4.23	254575
8.0	25.133	262/3	20	55	185.77	169.766	120	130	50	80	59.3	16	57913	16.13	254583
8.0	25.133	262/3	20	75	185.77	169.766	120	130	50	80	79.9	20	55674	14.06	254584
8.0	25.133	262/3	20	85	185.77	169.766	120	130	50	80	90.4	22	53627	12.78	254585
10.0	31.416	331/3	20	55	232.21	212.207	150	150	50	100	59.3	16	173618	31.70	254593
10.0	31.416	331/3	20	75	232.21	212.207	150	150	50	100	79.9	20	171035	29.31	254594
10.0	31.416	331/3	20	85	232.21	212.207	150	150	50	100	90.4	22	168674	27.84	254595

m_n: Normal module, P_t: Circular pitch [mm], z: Number of teeth, J: Moment of inertia [10^{-6} kg m^2], M: Weight [kg]

Shaft pinions, helical toothed with modular pitch

Hardened and ground

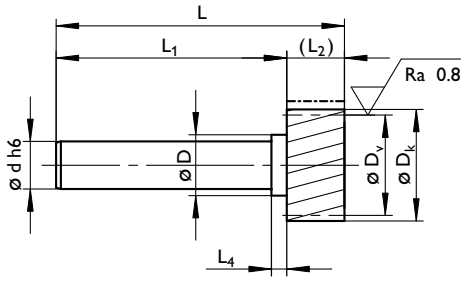

–·–· hardened

Material
16MnCr5 DIN 1.7131

Toothing
Pressure angle α = 20°
helical toothed helix angle β = 19° 31' 41''
hardened
and convex ground

Quality
6f24 DIN ISO1328 / DIN 3963/67

Geometric data

m_n	p_t	z	d	D_k	D_0	D_v	D	L	L_1	L_2	L_4	J	M	Art. No.
1.5	5.00	16	12	29.36	25.465	26.365	16.0	90.0	70.0	20	4.5	8	0.14	211116
1.5	5.00	20	20	34.83	31.831	31.831	26.0	110.0	90.0	20	4.5	26	0.34	211120
2.0	6.66	16	20	39.15	33.953	35.153	26.0	110.0	90.0	20	8.0	36	0.39	211216
2.0	6.66	20	25	46.44	42.441	42.441	32.0	140.0	120.0	20	8.0	90	0.70	211220
2.5	8.33	20	25	58.05	53.052	53.052	32.0	145.0	120.0	25	8.0	192	0.91	211320
3.0	10.00	16	25	58.73	50.930	52.730	32.0	150.0	120.0	30	8.0	218	0.99	211416
3.0	10.00	20	40	69.66	63.662	63.662	50.0	190.0	160.0	30	12.5	726	2.38	211420
4.0	13.33	20	40	92.88	84.883	84.883	50.0	200.0	160.0	40	18.0	1954	3.43	211520
5.0	16.66	20	60	116.10	106.103	106.103	85.0	310.0	260.0	50	35.0	8484	9.96	211620
4.0	13.33	20	60	92.88	84.883	84.883	74.0	310.0	270.0	40	14.5	4459	7.89	211521
6.0	20.00	20	90	139.32	127.324	127.324	105.0	350.0	290.0	60	20.0	27500	20.70	211720
8.0	26.66	20	90	185.77	169.766	169.766	105.0	350.0	270.0	80	35.0	65990	28.20	211820
10.0	33.33	15	90	185.16	159.155	165.155	105.0	410.0	310.0	100	40.0	66477	31.63	211915

m_n: Normal module, P_t: Circular pitch [mm], z: Number of teeth, D_0: Pitch circle diameter for calculation, D_v: Pitch circle diameter for construction, J: Moment of inertia [10^{-6} kg m^2], M: Weight [kg]

Module
1.5 - 10.0

Shaft pinion

Q6

Drive pinions, helical toothed with modular pitch

Hardened and convex ground

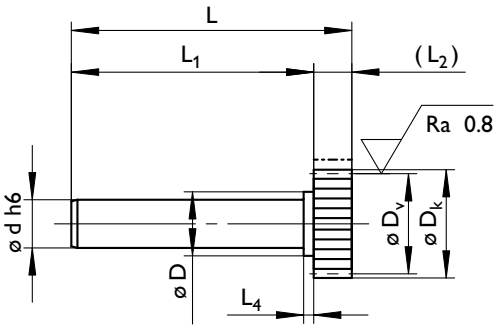

–·–· hardened

Material
16MnCr5 DIN 1.7131

Toothing
Pressure angle α = 20°
straight toothed
hardened
and convex ground

Quality
6f24 DIN ISO 1328 / DIN 3963/67

Geometric data

m_n	P_n	z	d	D_k	D_0	D_v	D	L	L1	L2	L4	J	M	Art. No.
1.5	4.72	16	12	27.90	24.000	24.900	16	90	70	20	4.5	7	0.14	201116
1.5	4.72	20	20	33.00	30.000	30.000	26	110	90	20	4.5	24	0.34	201120
2.0	6.28	16	20	37.20	32.000	33.200	26	110	90	20	8.0	31	0.37	201216
2.0	6.28	20	25	44.00	40.000	40.000	32	140	120	20	8.0	79	0.68	201220
2.5	7.85	20	25	55.00	50.000	50.000	32	145	120	25	8.0	160	0.86	201320
3.0	9.42	16	25	55.80	48.000	49.800	32	150	120	30	8.0	181	0.93	201416
3.0	9.42	20	40	66.00	60.000	60.000	50	190	160	30	12.5	647	2.30	201420
4.0	12.57	20	40	88.00	80.000	80.000	50	200	160	40	18.0	1619	3.24	201520
5.0	15.71	20	60	110.00	100.000	100.000	85	310	260	50	35.0	7461	9.57	201620
6.0	18.85	20	60	132.00	120.000	120.000	85	320	260	60	35.0	13159	11.80	201720
8.0	25.13	20	60	176.00	160.000	160.000	85	340	260	80	35.0	43780	19.06	201820
10.0	25.13	20	90	176.00	160.000	160.000	105	385	305	80	35.0	56971	28.31	201821
10.0	31.42	16	90	186.00	160.000	166.000	105	410	310	100	40.0	67473	31.78	201916

m_n: Normal module, P_t: Circular pitch [mm], z: Number of teeth, D_0: Pitch circle diameter for calculation, D_v: Pitch circle diameter for construction, J: Moment of inertia [10^6 kg m^2], M: Weight [kg]

Measuring pinions, straight toothed with metric pitch

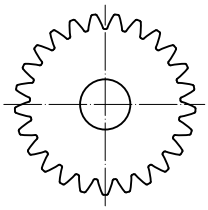

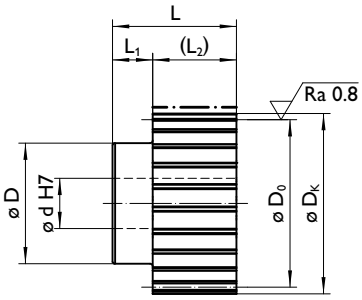

–·–· hardened

Hardened and ground

Material
16MnCr5 DIN 1.7131

Toothing
Pressure angle α = 20°
straight toothed
hardened
and convex ground

Quality
6f24 DIN ISO 1328 / DIN 3963/67

f_p [mm]
Pitch single deviation
Module ≤ 3; 0.006
Module > 3; 0.008

© Material: ETG100 DIN 17210
Toothing: finely toothed, bath-nitrided

Geometric data

m_n	P_t	z	d	D_k	D_0	D	L	L_1	L_2	J	M	Art. No.
0.637	2.0	25	5	17.2	15.92	10	15	5.5	9.5	0.50	0.02	154020[1]
1.592	5.0	20	10	35.0	31.83	25	23	8.5	14.5	14.00	0.11	154050
2.387	7.5	20	15	52.5	47.75	40	30	10.5	19.5	97.00	0.33	154075
3.183	10.0	20	15	70.0	63.66	50	43	13.5	29.5	434.00	0.88	154100
3.979	12.5	20	30	87.5	79.58	65	60	20.0	40.0	1433.00	1.62	154125
5.093	16.0	20	40	112.1	101.86	85	90	40.0	50.0	5290.00	3.57	154160
6.366	20.0	20	50	140.1	127.32	105	105	45.0	60.0	15759.00	7.39	154201
7.958	25.0	20	50	175.1	159.15	135	105	25.0	80.0	43116.00	11.60	154251

m_n: Normal module, P_t: Circular pitch [mm], z: Number of teeth, J: Moment of inertia [10^{-6} kg m^2], M: Weight [kg]
[1] Material: ETG100 DIN 17210

Pitch
2.0 - 25.0

Measuring pinions

Q6

Measuring pinions, straight toothed with metric pitch

Hardened and ground

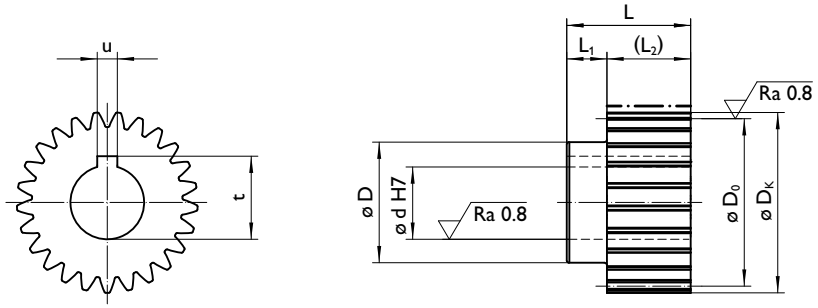

–·–· hardened

Material
16MnCr5 DIN 1.7131

Toothing
Pressure angle α = 20°
straight-toothed
hardened
and convex ground

Quality
6f24 DIN ISO 1328 / DIN 3963/67

f_p [mm]
Pitch single deviation
Module ≤ 3; 0.006
Module > 3; 0.008

Geometric data

m_n	P	z	d	D_k	D_0	D	L	L_1	L_2	t	u	J	M	Art. No.
0.637	2.0	25	6	17.19	15.915	10	15	5.5	9.5	7.0	2	0.49	0.01	154021
0.637	2.0	25	7	17.19	15.915	10	15	5.5	9.5	8.0	2	0.48	0.01	154022
1.592	5.0	20	11	35.01	31.831	25	23	8.5	14.5	12.8	4	14.00	0.11	154051
1.592	5.0	20	14	35.01	31.831	25	23	8.5	14.5	16.3	5	13.00	0.09	154052
1.592	5.0	20	16	35.01	31.831	25	23	8.5	14.5	18.3	5	13.00	0.09	154053
2.387	7.5	20	22	52.52	47.746	40	30	10.5	19.5	24.8	6	93.00	0.29	154076
2.387	7.5	20	25	52.52	47.746	40	30	10.5	19.5	28.3	8	89.00	0.26	154077
2.387	7.5	20	30	52.52	47.746	40	30	10.5	19.5	33.3	8	80.00	0.21	154078
3.183	10.0	20	22	70.03	63.662	50	43	13.5	29.5	24.8	6	428.00	0.81	154101
3.183	10.0	20	25	70.03	63.662	50	43	13.5	29.5	28.3	8	423.00	0.77	154102
3.183	10.0	20	32	70.03	63.662	50	43	13.5	29.5	35.3	10	401.00	0.67	154103
3.979	12.5	20	32	87.54	79.577	65	60	20.0	40.0	35.3	10	1454.00	1.69	154127
3.979	12.5	20	35	87.54	79.577	65	60	20.0	40.0	38.3	10	1433.00	1.62	154128
3.979	12.5	20	40	87.54	79.577	65	60	20.0	40.0	43.3	12	1384.00	1.48	154129
5.093	16.0	20	40	112.05	101.859	85	90	40.0	50.0	43.3	12	5544.00	4.07	154161
5.093	16.0	20	45	112.05	101.859	85	90	40.0	50.0	48.8	14	5438.00	3.83	154162
5.093	16.0	20	55	112.05	101.859	85	90	40.0	50.0	59.3	16	5090.00	3.28	154163
6.366	20.0	20	55	140.06	127.324	105	105	45.0	60.0	59.3	16	15528.00	7.05	154202
6.366	20.0	20	75	140.06	127.324	105	105	45.0	60.0	79.9	20	13719.00	5.38	154203
6.366	20.0	20	85	140.06	127.324	105	105	45.0	60.0	90.4	22	12066.00	4.35	154204
7.958	25.0	20	55	175.07	159.155	135	105	25.0	80.0	59.3	16	44930.00	13.26	154252
7.958	25.0	20	75	175.07	159.155	135	105	25.0	80.0	79.9	20	43121.00	11.59	154253
7.958	25.0	20	85	175.07	159.155	135	105	25.0	80.0	90.4	22	41468.00	10.56	154254

m_n: Normal module, P_t: Circular pitch [mm], z: Number of teeth, J: Moment of inertia [10^{-6} kg m^2], M: Weight [kg]

Spur gears and worm gear sets

GÜDEL

Steel spur gears

Straight toothed fine toothed

Material
C45 DIN 1.1191

Toothing
Pressure angle α = 20°
fine toothed

Quality
8e25 DIN ISO 1328 / DIN 3963/67

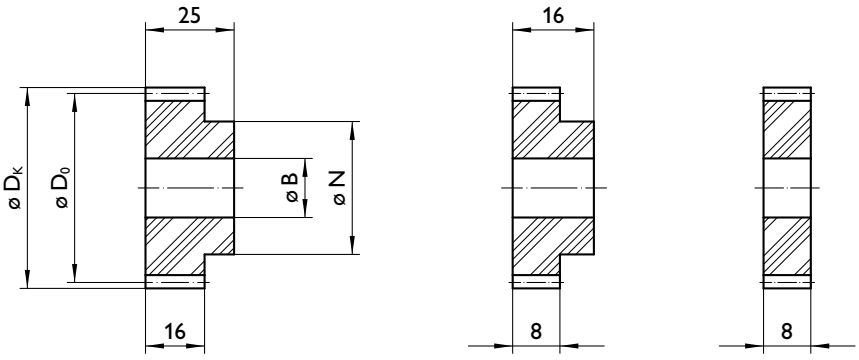

Type SNB Type SN Type ST

Geometric data

Z	B_{H7}	D_0	D_k	N	Art. No.	Art. No.	Art. No.
12	5	12	14	9	SNB 1012	SN 1012	
13	5	13	15	10	SNB 1013		
14	5	14	16	10	SNB 1014	SN 1014	
15	6	15	17	12	SNB 1015	SN 1015	
16	6	16	18	13	SNB 1016	SN 1016	
17	6	17	19	14	SNB 1017		
18	8	18	20	15	SNB 1018	SN 1018	
19	8	19	21	16	SNB 1019		
20	8	20	22	17	SNB 1020	SN 1020	
21	8	21	23	18	SNB 1021	SN 1021	
22	8	22	24	19	SNB 1022		
23	8	23	25	20	SNB 1023		
24	8	24	26	20	SNB 1024	SN 1024	
25	8	25	27	22	SNB 1025	SN 1025	
26	8	26	28	22	SNB 1026		
27	8	27	29	23	SNB 1027		
28	8	28	30	25	SNB 1028	SN 1028	
29	8	29	31	25	SNB 1029		
30	8	30	32	25	SNB 1030	SN 1030	
31	10	31	33	25	SNB 1031		
32	10	32	34	25	SNB 1032	SN 1032	
33	10	33	35	25	SNB 1033		
34	10	34	36	28	SNB 1034		
35	10	35	37	28	SNB 1035	SN 1035	
36	10	36	38	28	SNB 1036	SN 1036	
37	10	37	39	28	SNB 1037		
38	10	38	40	28	SNB 1038		
39	10	39	41	28	SNB 1039		

Module 1.0

Spur gears

Q8

Z	B_{H7}	D_0	D_k	N	Art. No.	Art. No.	Art. No.
40	10	40	42	30	SNB 1040	SN 1040	
41	10	41	43	30	SNB 1041		
42	10	42	44	30	SNB 1042	SN 1042	
43	10	43	45	30	SNB 1043		
44	10	44	46	30	SNB 1044		
45	10	45	47	30	SNB 1045	SN 1045	
46	10	46	48	30	SNB 1046		
47	10	47	49	35	SNB 1047		
48	10	48	50	35	SNB 1048	SN 1048	
49	10	49	51	35	SNB 1049		
50	10	50	52	35	SNB 1050	SN 1050	
51	10	51	53	35	SNB 1051		
52	10	52	54	40	SNB 1052		
53	10	53	55	40	SNB 1053		
54	10	54	56	40	SNB 1054	SN 1054	
55	10	55	57	40	SNB 1055		
56	10	56	58	40	SNB 1056	SN 1056	
57	10	57	59	40	SNB 1057		
58	10	58	60	45	SNB 1058		
59	10	59	61	45	SNB 1059		
60	10	60	62	50	SNB 1060	SN 1060	
64	10	64	66	50	SNB 1064		
70	10	70	72	50		SN 1070	
72	10	72	74	50	SNB 1072	SN 1072	
75	10	75	77	50		SN 1075	
80	10	80	82	50	SNB 1080		ST 1080
90	12	90	92	50	SNB 1090		ST 1090
96	12	96	98	50	SNB 1096		ST 1096
100	12	100	102				ST 10100
120	12	120	122				ST10120

Steel spur gears

Straight toothed fine toothed

Material
C45 DIN 1.1191

Toothing
Pressure angle α = 20°
fine toothed

Quality
8e25 DIN ISO 1328 / DIN 3963/67

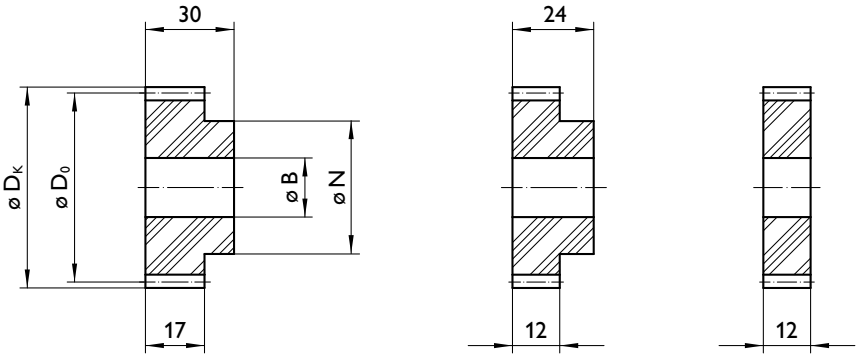

Type SNB Type SN Type ST

Geometric data

Z	B_{H7}	D_0	D_k	N	Art. No.	Art. No.	Art. No.
12	6	18.0	21.0	13	SNB 1512	SN 1512	
13	6	19.5	22.5	15	SNB 1513	SN 1513	
14	6	21.0	24.0	16	SNB 1514	SN 1514	
15	8	22.5	25.5	18	SNB 1515	SN 1515	ST 1515
16	8	24.0	27.0	19	SNB 1516	SN 1516	
17	8	25.5	28.5	20	SNB 1517		
18	8	27.0	30.0	22	SNB 1518	SN 1518	ST 1518
19	8	28.5	31.5	22	SNB 1519		
20	8	30.0	33.0	25	SNB 1520	SN 1520	ST 1520
21	8	31.5	34.5	25	SNB 1521	SN 1521	
22	8	33.0	36.0	28	SNB 1522		
23	8	34.5	37.5	28	SNB 1523		
24	8	36.0	39.0	30	SNB 1524	SN 1524	ST 1524
25	10	37.5	40.5	30	SNB 1525	SN 1525	
26	10	39.0	42.0	30	SNB 1526	SN 1526	
27	10	40.5	43.5	35	SNB 1527		
28	10	42.0	45.0	35	SNB 1528	SN 1528	
29	10	43.5	46.5	35	SNB 1529		
30	10	45.0	48.0	35	SNB 1530	SN 1530	
31	10	46.5	49.5	40	SNB 1531		
32	10	48.0	51.0	40	SNB 1532	SN 1532	
33	10	49.5	52.5	40	SNB 1533		
34	10	51.0	54.0	40	SNB 1534		
35	10	52.5	55.5	40	SNB 1535	SN 1535	
36	12	54.0	57.0	45	SNB 1536	SN 1536	ST 1536
37	12	55.5	58.5	45	SNB 1537		
38	12	57.0	60.0	45	SNB 1538		
39	12	58.5	61.5	45	SNB 1539		

Module 1.5

Spur gears

Q8

Z	B_{H7}	D_0	D_k	N	Art. No.	Art. No.	Art. No.
40	12	60.0	63.0	45	SNB 1540	SN 1540	ST 1540
41	12	61.5	64.5	50	SNB 1541		
42	12	63.0	66.0	50	SNB 1542	SN 1542	
43	12	64.5	67.5	50	SNB 1543		
44	12	66.0	69.0	50	SNB 1544		
45	12	67.5	70.5	50	SNB 1545	SN 1545	
46	12	69.0	72.0	55	SNB 1546		
47	12	70.5	73.5	55	SNB 1547		
48	12	72.0	75.0	55	SNB 1548	SN 1548	
49	12	73.5	76.5	55	SNB 1549		
50	12	75.0	78.0	55	SNB 1550	SN 1550	
54	12	81.0	84.0	60	SNB 1554	SN 1554	
56	12	84.0	87.0	60	SNB 1556	SN 1556	ST 1556
57	12	85.5	88.5	60	SNB 1557		
60	15	90.0	93.0	60	SNB 1560	SN 1560	
64	15	96.0	99.0	70	SNB 1564	SN 1564	
70	15	105.0	108.0	70	SNB 1570	SN 1570	
72	15	108.0	111.0	70	SNB 1572	SN 1572	ST 1572
75	15	112.5	115.5	70		SN 1575	
80	15	120.0	123.0	70	SNB 1580	SN 1580	ST 1580
84	20	126.0	129.0	70		SN 1584	ST 1584
96	20	144.0	147.0	70		SN 1596	
120	20	180.0	183.0	70		SN 15120	

Steel spur gears

Straight toothed fine toothed

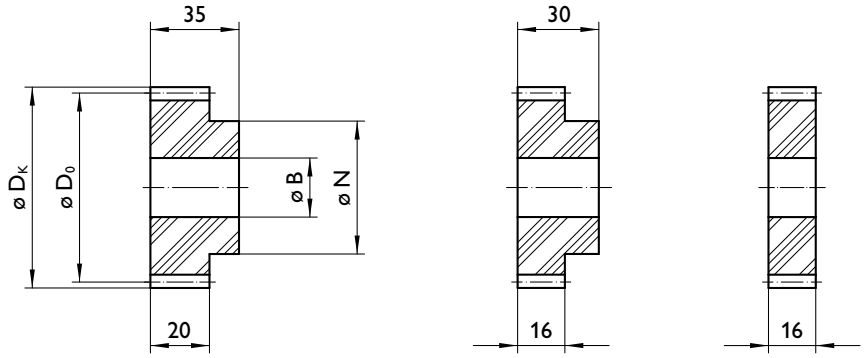

Type SNB Type SN Type ST

Material
C45 DIN 1.1191

Toothing
Pressure angle α = 20°
fine toothed

Quality
8e25 DIN ISO 1328 / DIN 3963/67

Geometric data

Z	B_{H7}	D_0	D_k	N	Art. No.	Art. No.	Art. No.
12	10	24	28	18	SNB 2012	SN 2012	ST 2012
13	10	26	30	19	SNB 2013	SN 2013	
14	12	28	32	20	SNB 2014	SN 2014	
15	12	30	34	24	SNB 2015	SN 2015	
16	12	32	36	25	SNB 2016	SN 2016	ST 2016
17	12	34	38	25	SNB 2017		
18	12	36	40	30	SNB 2018	SN 2018	ST 2018
19	12	38	42	32	SNB 2019		
20	15	40	44	33	SNB 2020	SN 2020	
21	15	42	46	34	SNB 2021	SN 2021	
22	15	44	48	35	SNB 2022		
23	15	46	50	35	SNB 2023		
24	15	48	52	40	SNB 2024	SN 2024	ST 2024
25	15	50	54	43	SNB 2025	SN 2025	
26	15	52	56	45	SNB 2026		
27	15	54	58	45	SNB 2027		
28	15	56	60	45	SNB 2028	SN 2028	ST 2028
29	15	58	62	50	SNB 2029		
30	15	60	64	50	SNB 2030	SN 2030	ST 2030
31	20	62	66	50	SNB 2031		
32	20	64	68	50	SNB 2032	SN 2032	
33	20	66	70	50	SNB 2033		
34	20	68	72	50	SNB 2034		
35	20	70	74	50	SNB 2035	SN 2035	
36	20	72	76	50	SNB 2036	SN 2036	
37	20	74	78	55	SNB 2037		
38	20	76	80	55	SNB 2038		
39	20	78	82	60	SNB 2039		

Module 2.0

Spur gears

Q8

Z	B_{H7}	D_0	D_k	N	Art. No.	Art. No.	Art. No.
40	20	80	84	60	SNB 2040	SN 2040	ST 2040
41	20	82	86	65	SNB 2041		
42	20	84	88	65	SNB 2042	SN 2042	
43	20	86	90	70	SNB 2043		
44	20	88	92	70	SNB 2044		
45	20	90	94	70	SNB 2045	SN 2045	
46	20	92	96	70	SNB 2046		
47	20	94	98	70	SNB 2047		
48	20	96	100	70	SNB 2048	SN 2048	
49	20	98	102	80	SNB 2049		
50	20	100	104	80	SNB 2050	SN 2050	ST 2050
54	20	108	112	80	SNB 2054	SN 2054	ST 2054
56	25	112	116	90	SNB 2056	SN 2056	
57	25	114	118	90	SNB 2057		
60	25	120	124	90	SNB 2060	SN 2060	ST 2060
64	25	128	132	90	SNB 2064		
70	25	140	144	90		SN 2070	
72	25	144	148	100	SNB 2072	SN 2072	ST 2072
80	30	160	164	100	SNB 2080		ST 2080
84	30	168	172				ST 2084
96	30	192	196				ST 2096
108	30	216	220				ST 20108
120	30	240	244				ST 20120

Steel spur gears

Straight toothed fine toothed

Material
C45 DIN 1.1191

Toothing
Pressure angle α = 20°
fine toothed

Quality
8e25 DIN ISO 1328 / DIN 3963/67

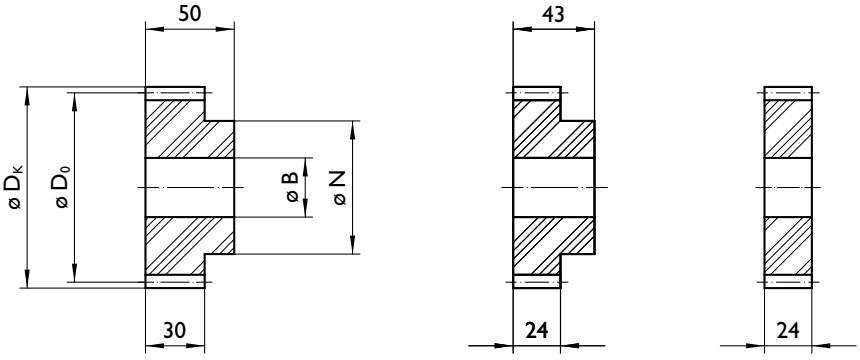

Type SNB Type SN Type ST

Geometric data

Z	B_{H7}	D_0	D_k	N	Art. No.	Art. No.	Art. No.
12	10	30.0	35.0	23	SNB 2512	SN 2512	
13	10	32.5	37.5	24	SNB 2513		
14	15	35.0	40.0	28	SNB 2514	SN 2514	
15	15	37.5	42.5	30	SNB 2515	SN 2515	
16	15	40.0	45.0	30	SNB 2516	SN 2516	
17	15	42.5	47.5	30	SNB 2517		
18	15	45.0	50.0	35	SNB 2518	SN 2518	
19	15	47.5	52.5	35	SNB 2519		
20	15	50.0	55.0	40	SNB 2520	SN 2520	
21	15	52.5	57.5	45	SNB 2521	SN 2521	
22	15	55.0	60.0	45	SNB 2522		
23	15	57.5	62.5	45	SNB 2523		
24	15	60.0	65.0	50	SNB 2524	SN 2524	
25	15	62.5	67.5	55	SNB 2525	SN 2525	
26	15	65.0	70.0	55	SNB 2526		
27	15	67.5	72.5	60	SNB 2527		
28	15	70.0	75.0	60	SNB 2528	SN 2528	
29	15	72.5	77.5	60	SNB 2529		
30	15	75.0	80.0	65	SNB 2530	SN 2530	ST 2030
31	20	77.5	82.5	65	SNB 2531		
32	20	80.0	85.0	70	SNB 2532	SN 2532	
33	20	82.5	87.5	70	SNB 2533		
34	20	85.0	90.0	70	SNB 2534		
35	20	87.5	92.5	70	SNB 2535	SN 2535	
36	20	90.0	95.0	70	SNB 2536	SN 2536	ST 2036
37	20	92.5	97.5	75	SNB 2537		
38	20	95.0	100.0	75	SNB 2538		
39	20	97.5	102.5	80	SNB 2539		

Module 2.5

Spur gears

Q8

Z	B_{H7}	D_0	D_k	N	Art. No.	Art. No.	Art. No.
40	20	100.0	105.0	80	SNB 2540	SN 2540	
42	20	105.0	110.0	80	SNB 2542	SN 2542	ST 2542
45	20	112.5	117.5	90	SNB 2545	SN 2545	
48	20	120.0	125.0	90	SNB 2548	SN 2548	
50	20	125.0	130.0	100	SNB 2550	SN 2550	ST 2550
54	25	135.0	140.0	100	SNB 2554	SN 2554	
56	25	140.0	145.0	100	SNB 2556	SN 2556	
60	25	150.0	155.0	100	SNB 2560	SN 2560	
70	25	175.0	180.0	100		SN 2570	
72	25	180.0	185.0	100	SNB 2572	SN 2572	ST 2572
80	25	200.0	205.0	100		SN 2580	ST 2580
84	30	210.0	215.0				ST 2584
96	30	240.0	245.0				ST 2596
108	30	270.0	275.0				ST 25108
120	30	300.0	305.0				ST 25120

Steel spur gears

Straight toothed fine toothed

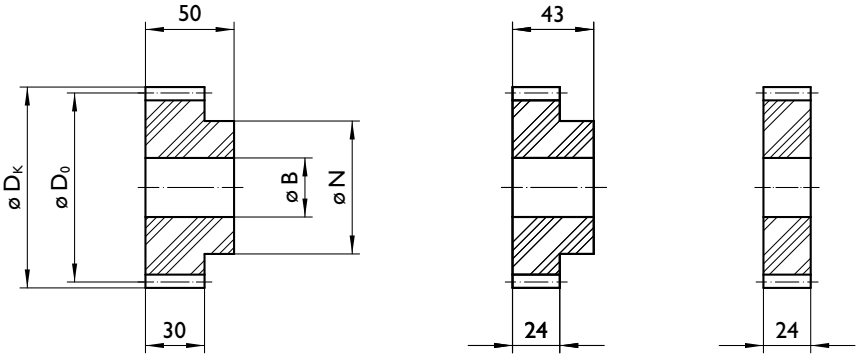

Type SNB Type SN Type ST

Material
C45 DIN 1.1191

Toothing
Pressure angle α = 20°
fine toothed

Quality
8e25 DIN ISO 1328 / DIN 3963/67

Geometric data

Z	B_{H7}	D_0	D_k	N	Art. No.	Art. No.	Art. No.
12	15	36	42	25	SNB 3012	SN 3012	
13	15	39	45	30	SNB 3013		
14	15	42	48	30	SNB 3014	SN 3014	
15	15	45	51	35	SNB 3015	SNB 3015	
16	15	48	54	35	SNB 3016	SN 3016	
17	15	51	57	40	SNB 3017		
18	15	54	60	45	SNB 3018	SN 3018	
19	15	57	63	45	SNB 3019		
20	15	60	66	45	SNB 3020	SNB 3020	
21	15	63	69	50	SNB 3021	SN 3021	
22	15	66	72	50	SNB 3022		
23	15	69	75	55	SNB 3023		
24	15	72	78	55	SNB 3024	SN 3024	
25	15	75	81	60	SNB 3025	SN 3025	
26	15	78	84	65	SNB 3026		
27	15	81	87	65	SNB 3027		
28	15	84	90	70	SNB 3028	SN 3028	ST 3028
29	15	87	93	70	SNB 3029		
30	20	90	96	75	SNB 3030	SN 3030	
31	20	93	99	80	SNB 3031		
32	20	96	102	80	SNB 3032	SN 3032	ST 3032
33	20	99	105	80	SNB 3033		
34	20	102	108	85	SNB 3034		
35	20	105	111	85	SNB 3035	SN 3035	
36	20	108	114	90	SNB 3036	SN 3036	
37	20	111	117	90	SNB 3037		
38	20	114	120	95	SNB 3038		
39	20	117	123	100	SNB 3039		

Module 3.0

Spur gears

Q8

Z	B_{H7}	D_0	D_k	N	Art. No.	Art. No.	Art. No.
40	20	120	126	100	SNB 3040	SN 3040	ST 3040
42	20	126	132	100	SNB 3042	SN 3042	ST 3042
45	20	135	141	100	SNB 3045	SN 3045	
48	20	144	150	100	SNB 3048	SN 3048	ST 3048
50	25	150	156	110	SNB 3050	SNB 3050	
54	25	162	168	110	SNB 3054	SN 3054	
56	25	168	174	120	SNB 3056	SN 3056	
60	25	180	186	120	SNB 3060	SN 3060	ST 3060
70	25	210	216	120		SN 3070	
72	25	216	222	120	SNB 3072	SN 3072	ST 3072
80	30	240	246	120	SNB 3080		ST 3080
96	30	288	294				ST 3096

Steel spur gears

Straight toothed fine toothed

Material
C45 DIN 1.1191

Toothing
Pressure angle α = 20°
fine toothed

Quality
8e25 DIN ISO 1328 / DIN 3963/67

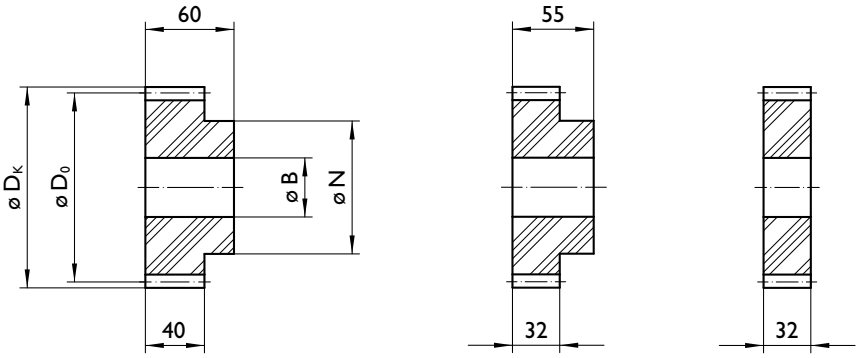

Type SNB Type SN Type ST

Geometric data

Z	B_{H7}	D_0	D_k	N	Art. No.	Art. No.	Art. No.
12	20	48	56	35	SNB 4012	SN 4012	
13	20	52	60	35	SNB 4013		
14	20	56	64	45	SNB 4014	SN 4014	
15	20	60	68	45	SNB 4015	SN 4015	
16	20	64	72	50	SNB 4016	SN 4016	
17	20	68	76	50	SNB 4017		
18	20	72	80	55	SNB 4018	SN 4018	
19	20	76	84	60	SNB 4019		
20	20	80	88	65	SNB 4020	SN 4020	
21	20	84	92	70	SNB 4021	SN 4021	
22	20	88	96	70	SNB 4022		
23	20	92	100	75	SNB 4023		
24	20	96	104	75	SNB 4024	SN 4024	
25	20	100	108	75	SNB 4025	SN 4025	
26	20	104	112	80	SNB 4026		
27	20	108	116	80	SNB 4027		
28	20	112	120	80	SNB 4028	SN 4028	
29	20	116	124	80	SNB 4029		
30	20	120	128	80	SNB 4030	SN 4030	
32	30	128	136	90	SNB 4032		
35	30	140	148	90	SNB 4035	SN 4035	
36	30	144	152	90	SNB 4036	SN 4036	
40	30	160	168	100	SNB 4040		ST 4040
42	30	168	176	100	SNB 4042	SN 4042	
45	30	180	188	110	SNB 4045	SN 4045	
48	30	192	200	110	SNB 4048	SN 4048	ST 4048
50	30	200	208	120	SNB 4050	SN 4050	
54	30	216	224	120	SNB 4054	SN 4054	

Module 4.0

Spur gears

Q8

Z	B_{H7}	D_0	D_k	N	Art. No.	Art. No.	Art. No.
56	30	224	232	130	SNB 4056	SNB 4056	
60	30	240	248	140	SNB 4060	SN 4060	ST 4060
64	40	256	264	140	SNB 4064	SN 4064	
70	40	280	288	140		SN 4070	
72	40	288	296	140	SNB 4072	SN 4072	ST 4072
80	40	320	328	140	SNB 4080		ST 4080

Steel spur gears

Straight toothed fine toothed

Material
C45 DIN 1.1191

Toothing
Pressure angle α = 20°
fine toothed

Quality
8e25 DIN ISO 1328 / DIN 3963/67

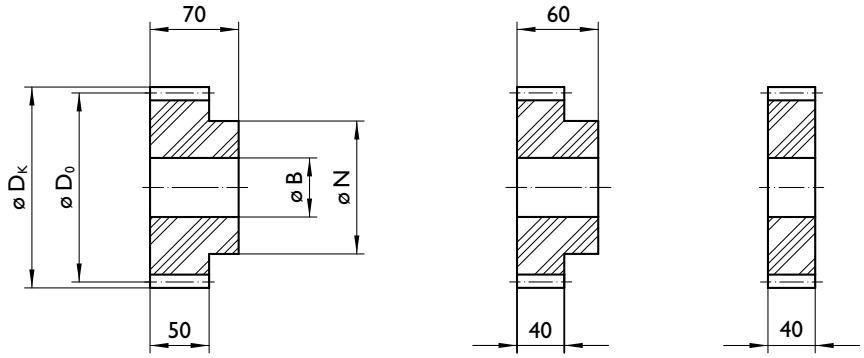

Type SNB Type SN Type ST

Geometric data

Z	B_{H7}	D_0	D_k	N	Art. No.	Art. No.	Art. No.
12	20	60	70	45	SNB 5012	SN 5012	
13	20	65	75	45	SNB 5013		
14	20	70	80	55	SNB 5014	SN 5014	
15	20	75	85	60	SNB 5015	SN 5015	ST 5015
16	20	80	90	65	SNB 5016	SN 5016	
17	20	85	95	70	SNB 5017		
18	20	90	100	70	SNB 5018	SN 5018	
19	20	95	105	70	SNB 5019		
20	25	100	110	75	SNB 5020	SN 5020	
21	25	105	115	75	SNB 5021		
22	25	110	120	80	SNB 5022		
23	25	115	125	80	SNB 5023		
24	25	120	130	80	SNB 5024	SN 5024	
25	25	125	135	80	SNB 5025	SN 5025	
26	25	130	140	90	SNB 5026		
27	25	135	145	90	SNB 5027		
28	25	140	150	90	SNB 5028	SN 5028	
29	25	145	155	90	SNB 5029		
30	25	150	160	90	SNB 5030	SN 5030	ST 5030
32	30	160	170	100	SNB 5032		
35	30	175	185	100	SNB 5035	SN 5035	
36	30	180	190	105	SNB 5036	SN 5036	
38	30	190	200	105	SNB 5038		
40	30	200	210	110	SNB 5040	SN 5040	ST 5040
45	30	225	235	110	SNB 5045	SN 5045	
48	30	240	250	120	SNB 5048	SN 5048	ST 5048
50	30	250	260	120	SNB 5050	SN 5050	
54	30	270	280	130	SNB 5054	SN 5054	

Module 5.0

Spur gears

Q8

Z	B_{H7}	D_0	D_k	N	Art. No.	Art. No.	Art. No.
56	30	280	290	140			
60	30	300	310	140	SNB 5060	SN 5060	ST 5060
80	30	400	410				ST 5080
90	30	450	460				ST 5090•
100	40	500	510				ST 50100•

• on request

Steel spur gears

Straight toothed fine toothed

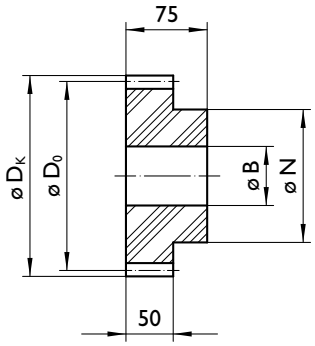

Type SN

Material
C45 DIN 1.1191

Toothing
Pressure angle α = 20°
fine toothed

Quality
8e25 DIN ISO 1328 / DIN 3963/67

Geometric data

Z	B_{H7}	D_0	D_k	N	Art. No.
12	20	72	84	50	SN 6012
15	20	90	102	65	SN 6015
16	20	96	108	70	SN 6016
18	20	108	120	75	SN 6018
20	25	120	132	80	SN 6020
24	25	144	156	80	SN 6024
25	25	150	162	90	SN 6025
28	25	168	180	90	SN 6028
30	25	180	192	100	SN 6030
36	30	216	228	110	SN 6036
40	30	240	252	120	SN 6040
45	30	115	282	130	SN 6045
48	30	120	300	140	SN 6048•
50	30	125	312	150	SN 6050•

• on request

Module 8.0

Spur gears

Q8

Steel spur gears

Straight toothed fine toothed

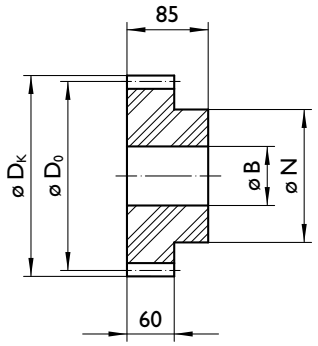

Type SN

Material
C45 DIN 1.1191

Toothing
Pressure angle α = 20°
fine toothed

Quality
8e25 DIN ISO 1328 / DIN 3963/67

Geometric data

Z	B_{H7}	D_0	D_k	N	Art. No.
15	30	120	136	100	SN 8015
18	30	144	160	110	SN 8018
20	40	160	176	120	SN 8020
24	40	192	208	120	SN 8024
30	40	240	256	160	SN 8030
36	50	288	304	160	SN 8036
40	50	320	336	180	SN 8040

• on request

Stainless steel spur gears

Straight toothed fine toothed

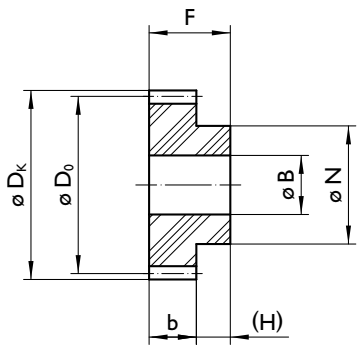

Type SNE

Material
X10CrNiS189 DIN 1.4305

Toothing
Pressure angle α = 20°
fine toothed

Quality
8e25 DIN ISO 1328 / DIN 3963/67

Geometric data

Module [mm]	Art. No.	Z	B_{H7}	D_0	D_k	N	F	H	b
1.0	SNE 1012	12	5	12.0	14.0	9	16	8	8
1.0	SNE 1015	15	6	15.0	17.0	12	16	8	8
1.0	SNE 1018	18	8	18.0	20.0	15	16	8	8
1.0	SNE 1020	20	8	20.0	22.0	17	16	8	8
1.0	SNE 1025	25	8	25.0	27.0	22	16	8	8
1.0	SNE 1030	30	8	30.0	32.0	25	16	8	8
1.0	SNE 1035	35	10	35.0	37.0	28	16	8	8
1.0	SNE 1040	40	10	40.0	42.0	30	16	8	8
1.0	SNE 1050	50	10	50.0	52.0	35	16	8	8
1.0	SNE 1060	60	10	60.0	62.0	50	16	8	8
1.5	SNE 1512	12	6	18.0	21.0	13	24	12	12
1.5	SNE 1515	15	8	22.5	25.5	18	24	12	12
1.5	SNE 1518	18	8	27.0	30.0	22	24	12	12
1.5	SNE 1520	20	8	30.0	33.0	25	24	12	12
1.5	SNE 1525	25	10	37.5	40.5	30	24	12	12
1.5	SNE 1530	30	10	45.0	48.0	35	24	12	12
1.5	SNE 1535	35	10	52.5	55.5	40	24	12	12
1.5	SNE 1540	40	12	60.0	63.0	45	24	12	12
1.5	SNE 1550	50	12	75.0	78.0	55	24	12	12
1.5	SNE 1560	60	15	90.0	93.0	60	24	12	12
2.0	SNE 2012	12	10	24.0	28.0	18	30	14	16
2.0	SNE 2015	15	12	30.0	34.0	24	30	14	16
2.0	SNE 2018	18	12	36.0	40.0	30	30	14	16
2.0	SNE 2020	20	15	40.0	44.0	33	30	14	16
2.0	SNE 2025	25	15	50.0	54.0	43	30	14	16
2.0	SNE 2030	30	15	60.0	64.0	50	30	14	16
2.0	SNE 2035	35	20	70.0	74.0	50	30	14	16
2.0	SNE 2040	40	20	80.0	84.0	60	30	14	16

Module
2.0 - 4.0

Spur gears

Q8

Module [mm]	Art. No.	Z	B_{H7}	D_0	D_k	N	F	H	b
2.0	SNE 2050	50	20	100.0	14.0	9	16	8	8
2.5	SNE 2512	12	10	30.0	17.0	12	16	8	8
2.5	SNE 2515	15	15	37.5	20.0	15	16	8	8
2.5	SNE 2518	18	15	45.0	22.0	17	16	8	8
2.5	SNE 2520	20	15	50.0	27.0	22	16	8	8
2.5	SNE 2525	25	15	62.5	32.0	25	16	8	8
2.5	SNE 2530	30	15	75.0	37.0	28	16	8	8
2.5	SNE 2535	35	20	87.5	42.0	30	16	8	8
2.5	SNE 2540	40	20	100.0	52.0	35	16	8	8
2.5	SNE 2550	50	20	125.0	62.0	50	16	8	8
3.0	SNE 3012	12	15	36.0	21.0	13	24	12	12
3.0	SNE 3015	15	15	45.0	25.5	18	24	12	12
3.0	SNE 3018	18	15	54.0	30.0	22	24	12	12
3.0	SNE 3020	20	15	60.0	33.0	25	24	12	12
3.0	SNE 3025	25	15	75.0	40.5	30	24	12	12
3.0	SNE 3030	30	20	90.0	48.0	35	24	12	12
3.0	SNE 3040	40	20	120.0	55.5	40	24	12	12
4.0	SNE 4012	12	20	48.0	63.0	45	24	12	12
4.0	SNE 4015	15	20	60.0	78.0	55	24	12	12
4.0	SNE 4018	18	20	72.0	93.0	60	24	12	12
4.0	SNE 4020	20	20	80.0	28.0	18	30	14	16
4.0	SNE 4025	25	20	100.0	34.0	24	30	14	16
4.0	SNE 4030	30	20	120.0	40.0	30	30	14	16
4.0	SNE 4040	40	20	160.0	44.0	33	30	14	16

Hardened spur gears

Straight toothed fine toothed

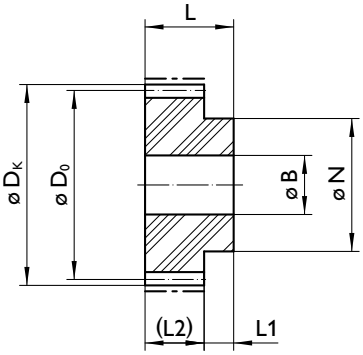

Material
C45 DIN 1.1191

Toothing
Pressure angle α = 20°
straight toothed
hardened

Quality
9e25 DIN ISO 1328 / DIN 3963/67

Geometric data

Module [mm]	Art. No.	Z	D_k	D_0	N	L	L_1	L_2	B_{H7}	m [kg]
1.0	102 020[1]	20	22	20	17	25	10	15	8	0.045
1.0	102 024[1]	24	26	24	20	25	10	15	8	0.067
1.0	102 030[1]	30	32	30	25	25	10	15	8	0.110
1.0	102 040[1]	40	42	40	30	25	10	15	10	0.190
1.5	104 020[1]	20	33	30	25	30	13	17	8	0.130
1.5	1104 024[1]	24	39	36	30	13	13	17	8	0.190
1.5	104 030[1]	30	48	45	35	30	13	17	10	0.320
1.5	104 040	40	63	60	45	30	13	17	12	0.530
2.0	106 020[1]	20	44	40	33	35	15	20	15	0.280
2.0	106 024[1]	24	52	48	40	35	15	20	15	0.370
2.0	106 030	30	64	60	50	35	15	20	15	0.590
2.0	106 040	40	84	80	60	35	15	20	20	1.040
2.5	108 020[1]	20	55	50	40	40	15	25	15	0.500
2.5	108 024	24	65	60	50	40	15	25	15	0.700
2.5	108 030	30	80	75	65	40	15	25	15	1.200
2.5	108 040	40	105	100	80	40	15	25	20	2.040
3.0	110 020	20	66	60	45	50	20	30	15	0.850
3.0	110 024	24	78	72	55	50	20	30	15	1.250
3.0	110 030	30	96	90	75	50	20	30	20	2.040
3.0	110 040	40	126	120	100	50	20	30	20	3.800
4.0	112 020	20	88	80	65	60	20	40	20	1.950
4.0	112 024	24	104	96	75	60	20	40	20	2.800
4.0	112 030	30	128	120	80	60	20	40	20	4.160
5.0	114 020	20	110	100	75	70	20	50	25	3.460
5.0	114 024	24	130	120	80	70	20	50	25	4.800
5.0	114 030	30	160	150	90	70	20	50	25	7.550

[1] Material ETG 100, fine toothing, nitrided

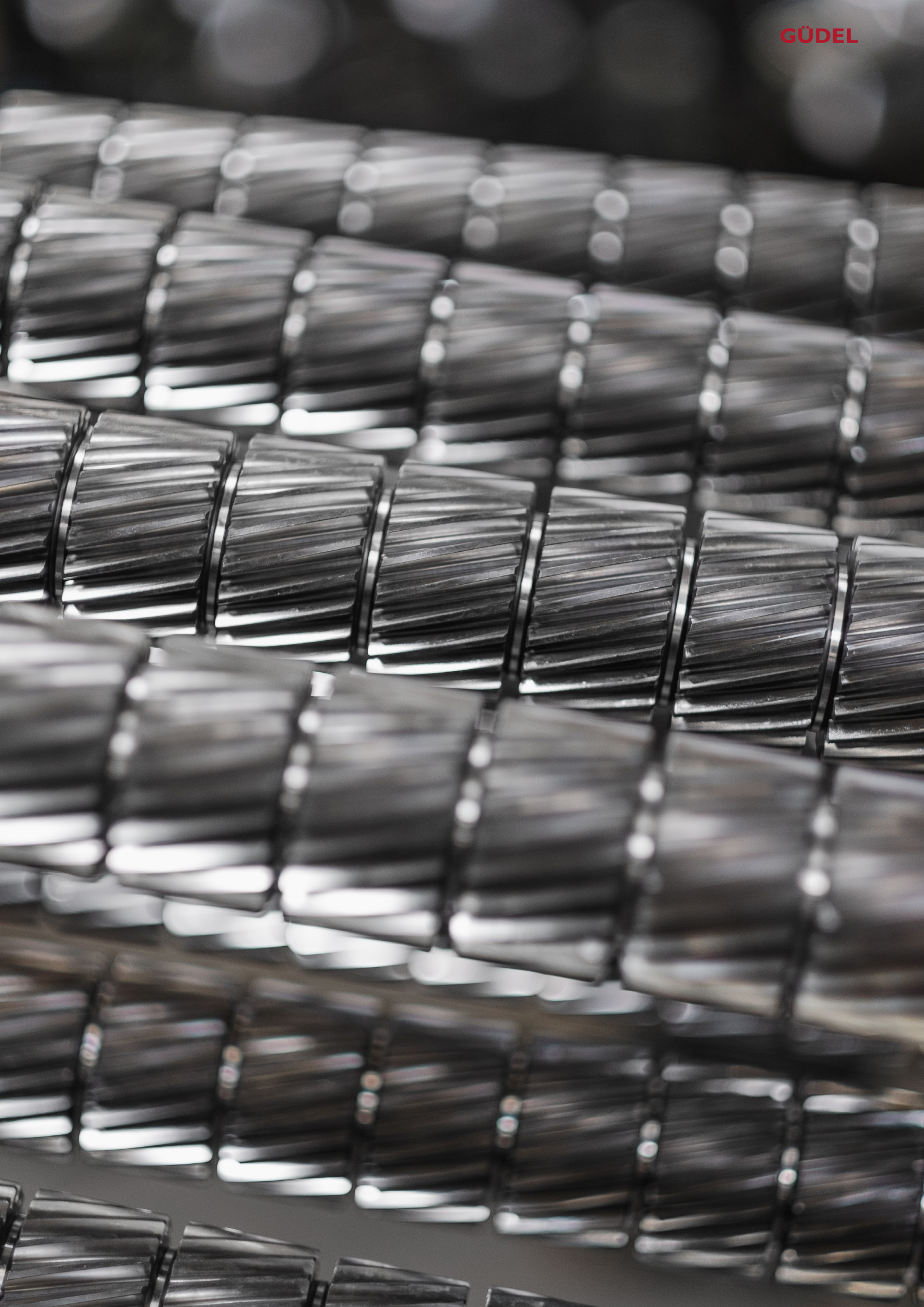
GÜDEL

Plastic spur gears with steel hub

Straight toothed fine toothed

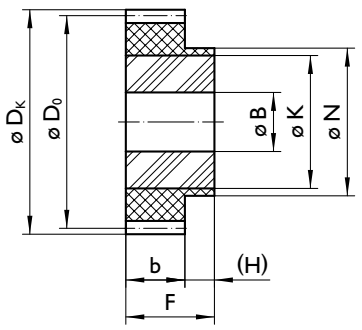

Type LMV

Material
Plastic PA 12 G
Steel hub C45 DIN 1.1191

Toothing
Pressure angle α = 20°
fine toothed

Quality
8e25 DIN ISO1328 / DIN 3963/67

Geometric data

Z	B_{H7}	N	K	D_k	D_0	F	H	b	Art. No.	$_{TN}$ [Nm]
30	10	35	25	48.0	45.0	30	13	17	LMV 1530	5.0
36	10	45	35	57.0	54.0	30	13	17	LMV 1536	6.2
40	10	50	40	63.0	60.0	30	13	17	LMV 1540	6.9
45	10	50	40	70.5	67.5	30	13	17	LMV 1545	7.8
48	10	55	45	75.0	72.0	30	13	17	LMV 1548	8.4
50	10	55	45	78.0	75.0	30	13	17	LMV 1550	9.0
56	15	65	55	87.0	84.0	30	13	17	LMV 1556	10.2
60	15	70	60	93.0	90.0	30	13	17	LMV 1560	11.1
64	15	70	60	99.0	96.0	30	13	17	LMV 1564	11.8
72	15	80	70	111.0	108.0	30	13	17	LMV 1572	13.5
80	20	85	75	123.0	120.0	30	13	17	LMV 1580	14.6
90	20	90	80	138.0	135.0	30	13	17	LMV 1590	16.4
100	20	110	90	153.0	150.0	30	13	17	LMV 15100	19.1
120	20	120	100	183.0	180.0	30	13	17	LMV 15120	23.0

Module 2.0

Spur gears

Q8

Plastic spur gears with steel hub

Straight toothed fine toothed

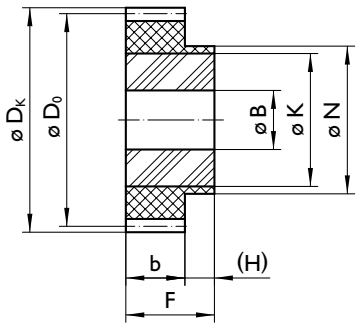

Type LMV

Material
Plastic PA 12 G
Steel hub C45 DIN 1.1191

Toothing
Pressure angle α = 20°
straight toothed

Quality
8e25 DIN ISO 1328 / DIN 3963/67

Geometric data

Z	B_{H7}	N	K	D_k	D_0	F	H	b	Art. No.	T_N [Nm]
20	10	35	25	44	40	35	15	20	LMV 2020	6.2
25	10	45	35	54	50	35	15	20	LMV 2025	7.8
28	15	45	35	60	56	35	15	20	LMV 2028	8.8
30	15	50	40	64	60	35	15	20	LMV 2030	10.0
36	15	55	45	76	72	35	15	20	LMV 2036	12.7
40	20	65	55	84	80	35	15	20	LMV 2040	14.7
45	20	70	60	94	90	35	15	20	LMV 2045	16.6
48	20	70	60	100	96	35	15	20	LMV 2048	17.8
50	20	75	65	104	100	35	15	20	LMV 2050	18.9
56	20	80	70	116	112	35	15	20	LMV 2056	21.2
60	20	85	75	124	120	35	15	20	LMV 2060	22.9
64	20	90	80	132	128	35	15	20	LMV 2064	24.4
72	25	90	80	148	144	35	15	20	LMV 2072	28.2
80	25	100	90	164	160	35	15	20	LMV 2080	30.1
90	25	110	100	184	180	35	15	20	LMV 2090	34.0
100	25	120	110	204	200	35	15	20	LMV 20100	40.4
120	25	130	120	244	240	35	15	20	LMV 20120	48.7

Plastic spur gears with steel hub

Straight toothed fine toothed

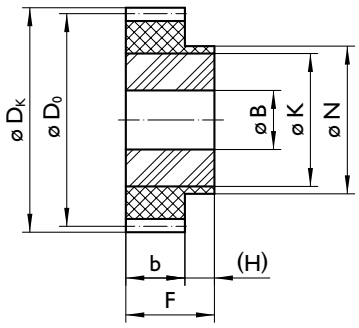

Type LMV

Material
Plastic PA 12 G
Steel hub C45 DIN 1.1191

Toothing
Pressure angle α = 20°
fine toothed

Quality
8e25 DIN ISO1328 / DIN 3963/67

Geometric data

Z	B_{H7}	N	K	D_k	D_0	F	H	b	Art. No.	$_{TN}$ [Nm]
18	10	35	25	50.0	45.0	40	15	25	LMV 2518	10.9
20	15	45	35	55.0	50.0	40	15	25	LMV 2520	12.1
25	15	50	40	67.5	62.5	40	15	25	LMV 2525	15.3
30	15	55	45	80.0	75.0	40	15	25	LMV 2530	20.3
36	15	70	60	95.0	90.0	40	15	25	LMV 2536	24.5
40	20	75	65	105.0	100.0	40	15	25	LMV 2540	28.7
45	20	80	70	117.5	112.5	40	15	25	LMV 2545	32.2
48	20	85	75	125.0	120.0	40	15	25	LMV 2548	34.5
50	20	85	75	130.0	125.0	40	15	25	LMV 2550	36.8
60	20	100	90	155.0	150.0	40	15	25	LMV 2560	44.3
72	20	110	100	185.0	180.0	40	15	25	LMV 2572	54.3
80	20	120	110	205.0	200.0	40	15	25	LMV 2580	61.3

Module 3.0

Spur gears

Q8

Plastic spur gears with steel hub

Straight toothed fine toothed

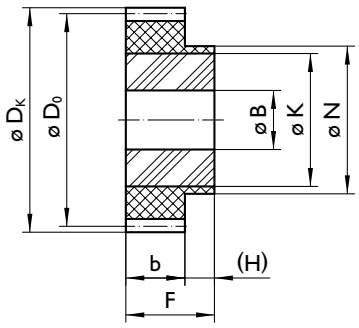

Type LMV

Material
Plastic PA 12 G
Steel hub C45 DIN 1.1191

Toothing
Pressure angle α = 20°
straight toothed

Quality
8e25 DIN ISO 1328 / DIN 3963/67

Geometric data

Z	B_{H7}	N	K	D_k	D_0	F	H	b	Art. No.	T_N [Nm]
18	10	45	35	60	54	50	20	30	LMV 3018	18.7
20	15	45	35	66	60	50	20	30	LMV 3020	20.3
25	15	55	45	81	75	50	20	30	LMV 3025	26.1
30	15	70	60	96	90	50	20	30	LMV 3030	35.3
36	20	80	70	114	108	50	20	30	LMV 3036	42.5
40	20	85	75	126	120	50	20	30	LMV 3040	49.6
45	20	85	75	141	135	50	20	30	LMV 3045	56.0
48	20	90	80	150	144	50	20	30	LMV 3048	53.9
50	20	100	90	156	150	50	20	30	LMV 3050	63.5
60	20	100	90	186	180	50	20	30	LMV 3060	76.4

Plastic spur gears with steel hub

Straight toothed fine toothed

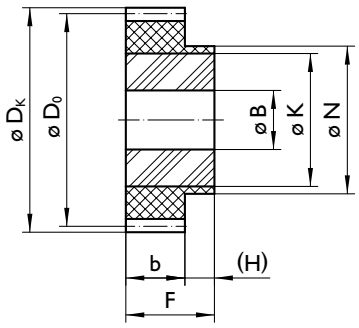

Type LMV

Material
Plastic PA 12 G
Steel hub C45 DIN 1.1191

Toothing
Pressure angle α = 20°
fine toothed

Quality
8e25 DIN ISO1328 / DIN 3963/67

Geometric data

Z	B_{H7}	N	K	D_k	D_0	F	H	b	Art. No.	T_N [Nm]
15	20	50	40	68	60	60	20	40	LMV 4015	36.0
20	20	65	45	88	80	60	20	40	LMV 4020	43.6
25	20	75	65	108	100	60	20	40	LMV 4025	62.2
30	20	85	75	128	120	60	20	40	LMV 4030	83.6
36	30	100	90	152	144	60	20	40	LMV 4036	100.0
40	30	100	90	168	160	60	20	40	LMV 4040	116.0
45	30	110	100	188	180	60	20	40	LMV 4045	131.0
50	30	120	110	208	200	60	20	40	LMV 4050	151.0
60	30	130	120	248	240	60	20	40	LMV 4060	182.0

GÜDEL
max 600 1/min
HAINBUCH

Plastic spur gears

Straight toothed
Injection molded

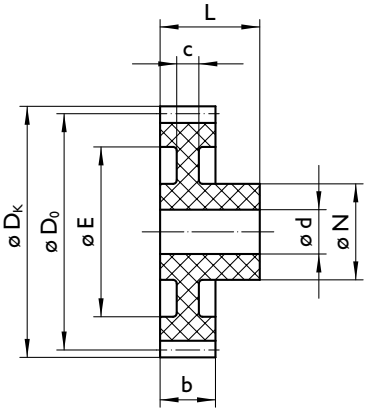

Type SH

Material
Plastic Hostaform C bore machined

Toothing
Pressure angle α = 20°
injection molded

Quality
12e28 DIN ISO 1328 / DIN 3963/67

Geometric data

Z	d [H9}	D_0	D_k	N	E	L	c	b	Art. No.
12	2	6.0	7.0	4		7		3	SH 0512
13	2	6.5	7.5	4		7		3	SH 0513
14	2	7.0	8.0	5		7		3	SH 0515
15	3	7.5	8.5	6		10		3	SH 0516
16	3	8.0	9.0	6		10		3	SH 0517
17	3	8.5	9.5	8		10		3	SH 0518
18	4	9.0	10.0	8		10		3	SH 0519
19	4	9.5	10.5	8		10		3	SH 0520
20	4	10.0	11.0	8		10		3	SH 0521
21	4	10.5	11.5	8		10		3	SH 0522
22	4	11.0	12.0	10		10		3	SH 0523
23	4	11.5	12.5	10		10		3	SH 0524
24	4	12.0	13.0	10		10		3	SH 0525
25	4	12.5	13.5	10		10		3	SH 0526
26	4	13.0	14.0	10		10		3	SH 0527
27	4	13.5	14.5	10		10		3	SH 0528
28	4	14.0	15.0	10		10		3	SH 0530
30	4	15.0	16.0	12		10		3	SH 0532
32	4	16.0	17.0	12	11.0	10	2	3	SH 0535
35	4	17.5	18.5	12	12.5	10	2	3	SH 0536
36	4	18.0	19.0	12	13.0	10	2	3	SH 0538
38	4	19.0	20.0	12	13.5	10	2	3	SH 0540
40	4	20.0	21.0	12	14.0	10	2	3	SH 0542
42	4	21.0	22.0	12	16.0	10	2	3	SH 0545
45	4	22.5	23.5	12	18.5	10	2	3	SH 0548
48	6	24.0	25.0	15	19.0	10	2	3	SH 0550
50	6	25.0	26.0	15	20.0	10	2	3	SH 0552
52	6	26.0	27.0	15	21.0	10	2	3	SH 0554

Module 0.5

Spur gears

Q12

Z	d [H9]	D_0	D_k	N	E	L	c	b	Art. No.
54	6	27.0	28.0	15	22	10	2	3	SH 0554
55	6	27.5	28.5	15	23	10	2	3	SH 0555
56	6	28.0	29.0	15	23	10	2	3	SH 0556
60	6	30.0	31.0	15	24	10	2	3	SH 0560
64	6	32.0	33.0	15	25	10	2	3	SH 0564
65	6	32.5	33.5	15	27	10	2	3	SH 0565
70	6	35.0	36.0	15	29	10	2	3	SH 0570
72	6	36.0	37.0	15	30	10	2	3	SH 0572
75	6	37.5	38.5	15	33	10	2	3	SH 0575
80	6	40.0	41.0	15	36	10	2	3	SH 0580
90	6	45.0	46.0	15	39	10	2	3	SH 0590
96	6	48.0	49.0	15	42	10	2	3	SH 0596
100	6	50.0	51.0	15	44	10	2	3	SH 05100
120	6	60.0	61.0	15	54	10	2	3	SH 05120

Plastic spur gears

Straight toothed
Injection molded

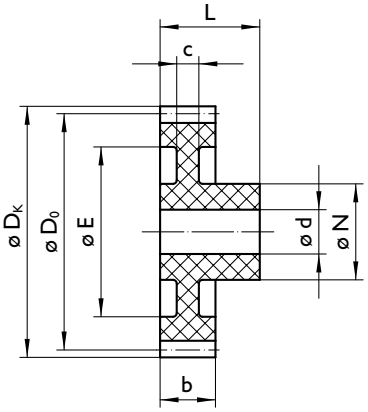

Type SH

Material
Plastic Hostaform C bore machined

Toothing
Pressure angle α = 20°
injection molded

Quality
12e28 DIN ISO 1328 / DIN 3963/67

Geometric data

Z	d [H9]	D_0	D_k	N	E	L	c	b	Art. No.
12	3	8.4	9.8	6		15		6	SH 0712
13	3	9.1	10.5	6		15		6	SH 0713
14	3	9.8	11.2	6		15		6	SH 0714
15	3	10.5	11.9	6		15		6	SH 0715
16	4	11.2	12.6	9		15		6	SH 0716
17	4	11.9	13.3	9		15		6	SH 0717
18	4	12.6	14.0	9		15		6	SH 0718
19	4	13.3	14.7	9		15		6	SH 0719
20	4	14.0	15.4	9		15		6	SH 0720
21	4	14.7	16.1	9		15		6	SH 0721
22	4	15.4	16.8	9		15		6	SH 0722
23	4	16.1	17.5	9		15		6	SH 0723
24	4	16.8	18.2	9	13.5	15	3	6	SH 0724
25	6	17.5	18.9	9	13.5	15	3	6	SH 0725
26	6	18.2	19.6	9	13.5	15	3	6	SH 0726
27	6	18.9	20.3	9	13.5	15	3	6	SH 0727
28	6	19.6	21.0	9	13.5	15	3	6	SH 0728
30	6	21.0	22.4	12	16.0	15	3	6	SH 0730
32	6	22.4	23.8	12	16.0	15	3	6	SH 0732
35	6	24.5	25.9	15	19.0	15	3	6	SH 0735
36	6	25.2	26.6	15	19.0	15	3	6	SH 0736
38	6	26.6	28.0	15	21.5	15	3	6	SH 0738
40	6	28.0	29.4	15	21.5	15	3	6	SH 0740
42	6	29.4	30.8	18	24.5	15	2	6	SH 0742
45	6	31.5	32.9	18	24.5	15	2	6	SH 0745
48	8	33.6	35.0	18	24.5	15	2	6	SH 0748
50	8	35.0	36.4	18	28.0	15	2	6	SH 0750
52	8	36.4	37.8	18	28.0	15	2	6	SH 0752

Module 0.7

Spur gears

Q12

Z	d [H9]	D_0	D_k	N	E	L	c	b	Art. No.
54	8	37.8	39.2	18	28.0	15	2	6	SH 0754
55	8	38.5	39.9	18	31.0	15	2	6	SH 0755
56	8	39.2	40.6	18	31.0	15	2	6	SH 0756
60	8	42.0	43.4	18	31.0	15	2	6	SH 0760
64	8	44.8	46.2	18	37.5	15	2	6	SH 0764
65	8	45.8	46.9	18	37.5	15	2	6	SH 0765
70	8	49.0	50.4	18	37.5	15	2	6	SH 0770
72	8	50.4	51.8	18	37.5	15	2	6	SH 0772
75	10	52.5	53.9	18	37.5	15	2	6	SH 0775
80	10	56.0	57.4	21	47.0	15	2	6	SH 0780
90	10	63.0	64.4	21	56.5	15	2	6	SH 0790
96	10	67.2	68.6	21	56.6	15	2	6	SH 0796
100	10	70.0	71.4	21	56.5	15	2	6	SH 07100
120	10	84.0	85.4	21	77.0	15	2	6	SH 07120

Plastic spur gears

Straight toothed
Injection molded

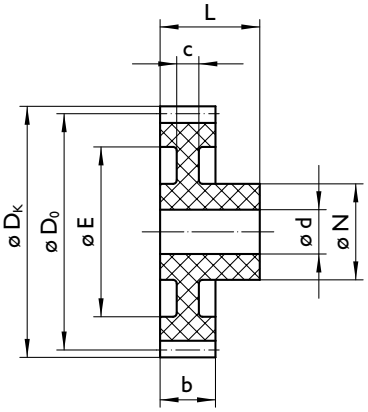

Type SH

Material
Plastic Hostaform C bore machined

Toothing
Pressure angle α = 20°
injection molded

Quality
12e28 DIN ISO 1328 / DIN 3963/67

Geometric data

Z	d [H9]	D_0	D_k	N	E	L	c	b	Art. No.
12	4	12	14	9		17		9	SH 1012
13	4	13	15	9		17		9	SH 1013
14	4	14	16	9		17		9	SH 1014
15	4	15	17	9		17		9	SH 1015
16	4	16	18	9		17		9	SH 1016
17	4	17	19	9		17		9	SH 1017
18	4	18	20	9	13.5	17	6.0	9	SH 1018
19	4	19	21	9	13.5	17	6.0	9	SH 1019
20	4	20	22	9	13.5	17	6.0	9	SH 1020
21	5	21	23	12	16.0	17	6.0	9	SH 1021
22	5	22	24	12	16.0	17	6.0	9	SH 1022
23	5	23	25	12	16.0	17	6.0	9	SH 1023
24	6	24	26	15	19.0	18	6.0	9	SH 1024
25	6	25	27	15	19.0	18	6.0	9	SH 1025
26	6	26	28	15	19.0	18	6.0	9	SH 1026
27	6	27	29	15	19.0	18	6.0	9	SH 1027
28	6	28	30	15	22.0	18	6.0	9	SH 1028
30	6	30	32	15	22.0	18	6.0	9	SH 1030
32	6	32	34	18	24.5	18	4.6	9	SH 1032
35	8	35	37	18	24.5	18	4.6	9	SH 1035
36	8	36	38	18	28.0	18	4.6	9	SH 1036
38	8	38	40	18	28.0	18	4.6	9	SH 1038
40	8	40	42	18	28.0	18	4.6	9	SH 1040
42	8	42	44	18	38.0	18	4.6	9	SH 1042
45	8	45	47	18	37.0	18	4.6	9	SH 1045
48	8	48	50	18	37.0	18	4.6	9	SH 1048
50	8	50	52	18	37.0	18	4.6	9	SH 1050
52	8	52	54	21	47.0	18	4.6	9	SH 1052

Module 1.0

Spur gears

Q12

Z	d [H9]	D_0	D_k	N	E	L	c	b	Art. No.
54	8	54	56	21	47.0	18	4.6	9	SH 1054
55	8	55	57	21	47.0	18	4.6	9	SH 1055
56	8	56	58	21	47.0	18	4.6	9	SH 1056
60	8	60	62	21	47.0	18	4.6	9	SH 1060
64	10	64	66	21	57.0	18	4.6	9	SH 1064
65	10	65	67	21	57.0	18	4.6	9	SH 1065
70	10	70	72	21	57.0	18	4.6	9	SH 1070
72	10	72	74	21	67.0	18	4.6	9	SH 1072
75	10	75	77	21	67.0	18	4.6	9	SH 1075
80	10	80	82	21	67.0	18	4.6	9	SH 1080
85	10	85	87	21	77.0	18	4.6	9	SH 1085
90	10	90	92	21	77.0	18	4.6	9	SH 1090

Plastic spur gears

Straight toothed
Injection molded

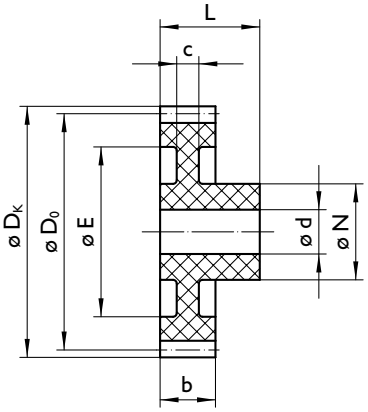

Type SH

Material
Plastic Hostaform C bore machined

Toothing
Pressure angle α = 20°
injection molded

Quality
12e28 DIN ISO 1328 / DIN 3963/67

Geometric data

Z	d [H9]	D_0	D_k	N	E	L	c	b	Art. No.
12	5	15.00	17.50	9		19		10	SH 12512
13	5	16.25	18.75	9		19		10	SH 12513
14	5	17.50	20.00	9		19		10	SH 12514
15	5	18.75	21.25	9	13.5	19	7.0	10	SH 12515
16	5	20.00	22.50	9	13.5	19	7.0	10	SH 12516
17	5	21.25	23.75	9	13.5	19	7.0	10	SH 12517
18	5	22.50	25.00	12	16.0	19	7.0	10	SH 12518
19	5	23.75	26.25	12	16.0	19	7.0	10	SH 12519
20	5	25.00	27.50	12	16.0	19	7.0	10	SH 12520
21	6	26.25	28.75	15	19.0	19	7.0	10	SH 12521
22	6	27.50	30.00	15	19.0	19	7.0	10	SH 12522
23	6	28.75	31.25	15	19.0	19	7.0	10	SH 12523
24	6	30.00	32.50	15	21.5	19	7.0	10	SH 12524
25	6	31.25	33.75	15	21.5	19	7.0	10	SH 12525
26	6	32.50	35.00	18	24.0	19	5.5	10	SH 12526
27	6	33.75	36.25	18	24.0	19	5.5	10	SH 12527
28	8	35.00	37.50	18	24.0	19	5.5	10	SH 12528
30	8	37.50	40.00	18	28.0	19	5.5	10	SH 12530
32	8	40.00	42.20	18	28.0	19	5.5	10	SH 12532
35	8	43.75	46.25	18	28.0	19	5.5	10	SH 12535
36	8	45.00	47.50	18	37.5	19	5.5	10	SH 12536
38	8	47.50	50.00	18	37.5	19	5.5	10	SH 12538
40	8	50.00	52.50	18	37.5	19	5.5	10	SH 12540
42	8	52.50	55.00	18	37.5	19	5.5	10	SH 12542
45	8	56.25	58.75	21	47.5	19	5.5	10	SH 12545
48	8	60.00	62.50	21	47.5	19	5.5	10	SH 12548
50	8	62.50	65.00	21	47.5	19	5.5	10	SH 12550
52	10	65.00	67.50	21	57.0	19	5.5	10	SH 12552

Module 1.25

Spur gears

Q12

Z	d [H9]	D_0	D_k	N	E	L	c	b	Art. No.
54	10	67.50	70.00	21	57	19	5.5	10	SH 12554
55	10	68.75	71.25	21	57	19	5.5	10	SH 12555
56	10	70.00	72.50	21	57	19	5.5	10	SH 12556
60	10	75.00	77.50	21	67	19	5.5	10	SH 12560
64	10	80.00	82.50	21	67	19	5.5	10	SH 12564
65	10	81.25	83.75	21	67	19	5.5	10	SH 12565
70	10	87.50	90.00	21	77	19	5.5	10	SH 12570
75	10	93.75	96.25	21	77	19	5.5	10	SH 12575

Plastic spur gears

Straight toothed
Injection molded

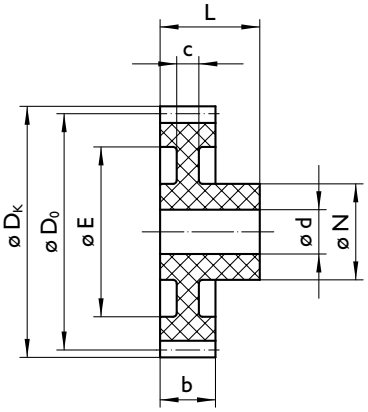

Type SH

Material
Plastic Hostaform C bore machined

Toothing
Pressure angle α = 20°
injection molded

Quality
12e28 DIN ISO 1328 / DIN 3963/67

Geometric data

Z	d [H9]	D_0	D_k	N	E	L	c	b	Art. No.
12	6	18.0	21.0	14		23		12	SH 1512
13	6	19.5	22.5	14		23		12	SH 1513
14	6	21.0	24.0	14		23		12	SH 1514
15	6	22.5	25.5	14		23		12	SH 1515
16	6	24.0	27.0	14		23		12	SH 1516
17	6	25.5	28.5	14		23		12	SH 1517
18	8	27.0	30.0	17		23		12	SH 1518
19	8	28.5	31.5	17		23		12	SH 1519
20	8	30.0	33.0	17		23		12	SH 1520
21	8	31.5	34.5	17	23	23	5	12	SH 1521
22	8	33.0	36.0	17	23	23	5	12	SH 1522
23	8	34.5	37.5	17	23	23	5	12	SH 1523
24	8	36.0	39.0	19	27	23	5	12	SH 1524
25	8	37.5	40.5	19	27	23	5	12	SH 1525
26	8	39.0	42.0	19	27	23	5	12	SH 1526
27	8	40.5	43.5	19	27	23	5	12	SH 1527
28	8	42.0	45.0	19	27	23	5	12	SH 1528
30	10	45.0	48.0	24	35	23	5	12	SH 1530
32	10	48.0	51.0	24	35	23	5	12	SH 1532
35	10	52.5	55.5	24	43	23	5	12	SH 1535
36	10	54.0	57.0	24	43	23	5	12	SH 1536
38	10	57.0	60.0	24	43	23	5	12	SH 1538
40	10	60.0	63.0	24	50	23	5	12	SH 1540
42	10	63.0	66.0	24	50	23	5	12	SH 1542
45	10	67.5	70.5	24	50	23	5	12	SH 1545
48	10	72.0	75.0	24	50	23	5	12	SH 1548
50	12	75.0	78.0	27	65	23	5	12	SH 1550
52	12	78.0	81.0	27	65	23	5	12	SH 1552

Module 1.5

Spur gears

Q12

Z	d [H9]	D_0	D_k	N	E	L	c	b	Art. No.
54	12	81.0	84.0	27	65	23	5	12	SH 1554
55	12	82.5	85.5	27	65	23	5	12	SH 1555
60	12	90.0	93.0	27	65	23	5	12	SH 1560

Plastic spur gears

Straight toothed
Injection molded

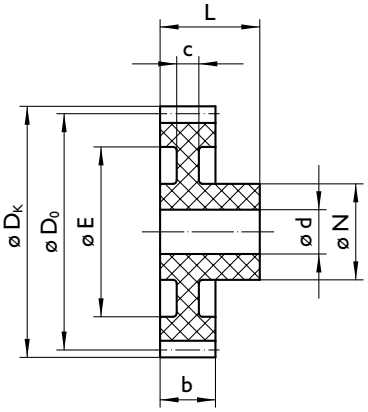

Type SH

Material
Plastic Hostaform C bore machined

Toothing
Pressure angle α = 20°
injection molded

Quality
12e28 DIN ISO 1328 / DIN 3963/67

Geometric data

Z	d [H9]	D_0	D_k	N	E	L	c	b	Art. No.
12	8	24	28	18.5		27		15	SH 2012
13	8	26	30	18.5		27		15	SH 2013
14	8	28	32	18.5		27		15	SH 2014
15	8	30	34	18.5		27		15	SH 2015
16	8	32	36	17.5	23	27	6	15	SH 2016
17	8	34	38	17.5	25	27	6	15	SH 2017
18	8	36	40	17.5	26	27	6	15	SH 2018
19	8	38	42	17.5	28	27	6	15	SH 2019
20	10	40	44	20.0	29	27	6	15	SH 2020
21	10	42	46	20.0	29	27	6	15	SH 2021
22	10	44	48	20.0	29	27	6	15	SH 2022
23	10	46	50	20.0	36	27	6	15	SH 2023
24	10	48	52	24.0	36	27	6	15	SH 2024
25	10	50	54	24.0	36	27	6	15	SH 2025
26	10	52	56	24.0	40	27	6	15	SH 2026
27	10	54	58	24.0	40	27	6	15	SH 2027
28	10	56	60	24.0	40	27	6	15	SH 2028
30	10	60	64	24.0	46	27	6	15	SH 2030
32	10	64	68	26.0	46	27	6	15	SH 2032
35	12	70	74	26.0	56	27	6	15	SH 2035
36	12	72	76	26.0	56	27	6	15	SH 2036
38	12	76	80	26.0	64	27	6	15	SH 2038
40	12	80	84	26.0	64	27	6	15	SH 2040
42	12	84	88	26.0	64	27	6	15	SH 2042

Module 3.0

Spur gears

Q12

Plastic spur gears

Straight toothed
Injection molded

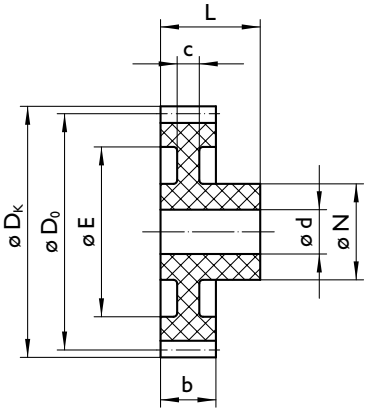

Type SH

Material
Plastic Hostaform C bore machined

Toothing
Pressure angle α = 20°
injection molded

Quality
12e28 DIN ISO 1328 / DIN 3963/67

Geometric data

Z	d [H9]	D_0	D_k	N	E	L	c	b	Art. No.
12	12	36	42	24		34		19	SH 3012
13	12	39	45	24		34		19	SH 3013
14	12	42	48	24		34		19	SH 3014
15	12	45	51	24	30	34	8	19	SH 3015
16	12	48	54	24	30	34	8	19	SH 3016
17	12	51	57	24	30	34	8	19	SH 3017
18	12	54	60	24	38	34	8	19	SH 3018
19	12	57	63	24	38	34	8	19	SH 3019
20	12	60	66	24	38	34	8	19	SH 3020
21	12	63	69	24	45	34	8	19	SH 3021
22	12	66	72	24	45	34	8	19	SH 3022
23	12	69	75	24	52	34	8	19	SH 3023
24	12	72	78	24	52	34	8	19	SH 3024
25	14	75	81	28	58	34	8	19	SH 3025
26	14	78	84	28	58	34	8	19	SH 3026
27	14	81	87	28	58	34	8	19	SH 3027
28	14	84	90	28	68	34	8	19	SH 3028
30	14	90	96	28	68	34	8	19	SH 3030

Worm gear sets

Fine toothed

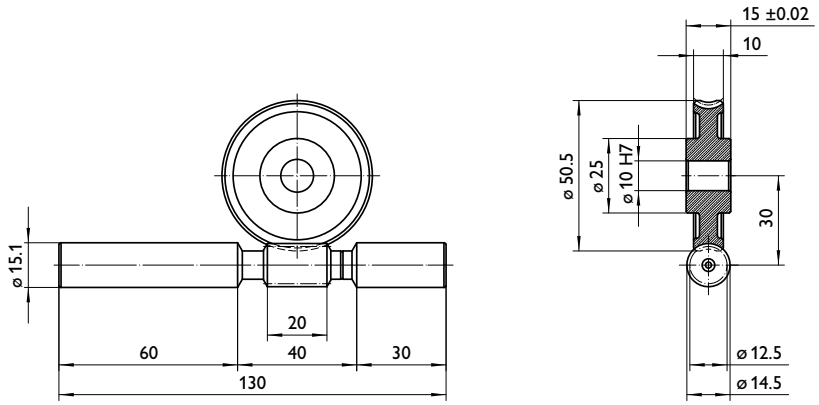

Material
Wheel in CuZN40A12
Worm shaft 42CrMo4V 1.7225

Toothing
Pressure angle α = 20°
fine toothed

Quality
8f24 DIN ISO 1328 / DIN 3963/67

Geometric data

Translation [i]	Module	Number of gears	Number of teeth	Art. No. Shank worm	Art. No. Worm wheel
47:1	1.0	1	47	S 1001	R 1001
23.5:1	1.0	2	47	S 1002	R 1002
15.33:1	1.0	3	46	S 1003	R 1003
11.25:1	1.0	4	45	S 1004	R 1004
8.6:1	1.0	5	43	S 1005	R 1005
6.83:1	1.0	6	41	S 1006	R 1006
5.57:1	1.0	7	39	S 1007	R 1007
4.63:1	1.0	8	37	S 1008	R 1008

a=45 mm

Worms and worm gears

Q8

Worm gear sets

Fine toothed

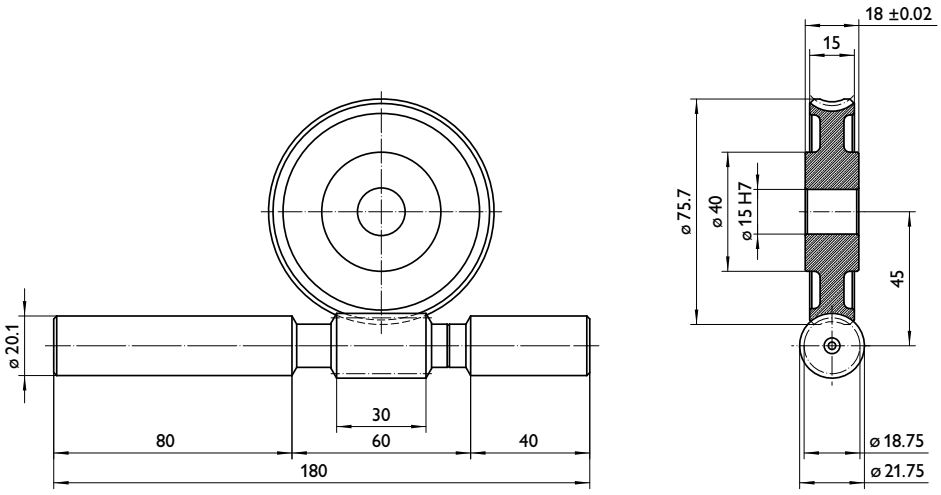

Material
Wheel in CuZN40A12
Worm shaft ESP65

Toothing
Pressure angle α = 20°
fine toothed

Quality
8f24 DIN ISO 1328 / DIN 3963/67

Geometric data

Translation [i]	Module	Number of gears	Number of teeth	Art. No. Shank worm	Art. No. Worm wheel
47:1	1.5	1	47	S 1501	R 1501
23.5:1	1.5	2	47	S 1502	R 1502
15.33:1	1.5	3	46	S 1503	R 1503
11.25:1	1.5	4	45	S 1504	R 1504
8.6:1	1.5	5	43	S 1505	R 1505
6.83:1	1.5	6	41	S 1506	R 1506
5.57:1	1.5	7	39	S 1507	R 1507
4.63:1	1.5	8	37	S 1508	R 1508

Worm gear sets

Fine toothed

Type R

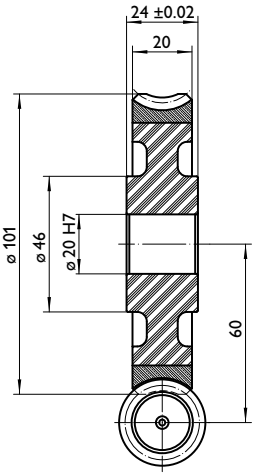

Type K

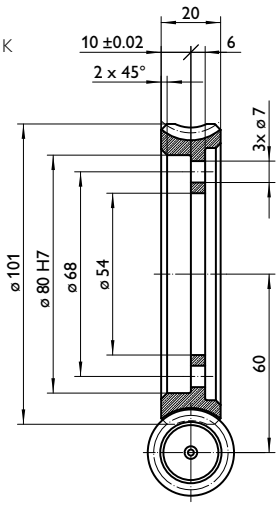

Type S

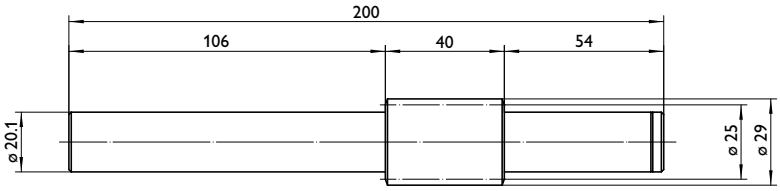

Type B

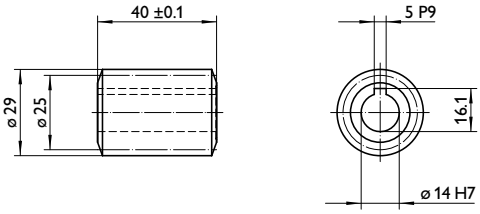

Material
Wheel in CuZN40A12
Worm shaft ESP65
Hollow worm ESP65

Toothing
Pressure angle α = 20°
fine toothed

Quality
8f24 DIN ISO 1328 / DIN 3963/67

Geometric data

Translation [i]	Module	Number of gears	Number of teeth	Art. No. Shank worm	Art. No. Hollow worm	Art. No. Worm wheel	Art. No. Worm wheel rim
47:1	2.0	1	47	S 2001	B 2001	R 2001	K 2001
23.5:1	2.0	2	47	S 2002	B 2002	R 2002	K 2002
15.33:1	2.0	3	46	S 2003	B 2003	R 2003	K 2003
11.25:1	2.0	4	45	S 2004	B 2004	R 2004	K 2004
8.6:1	2.0	5	43	S 2005	B 2005	R 2005	K 2005
6.83:1	2.0	6	41	S 2006	B 2006	R 2006	K 2006
5.57:1	2.0	7	39	S 2007	B 2007	R 2007	K 2007
4.63:1	2.0	8	37	S 2008	B 2008	R 2008	K 2008

a=75 mm

Worms and worm gears

Q8

Worm gear sets

Fine toothed

Type R

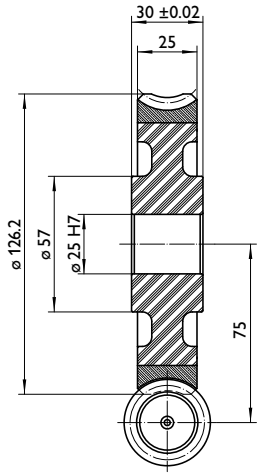

Type K

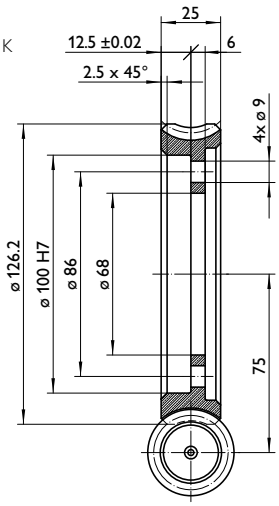

Material
Wheel in CuZN40A12
Worm shaft ESP65
Hollow worm ESP65

Toothing
Pressure angle α = 20°
fine toothed

Quality
8f24 DIN ISO 1328 / DIN 3963/67

Type S

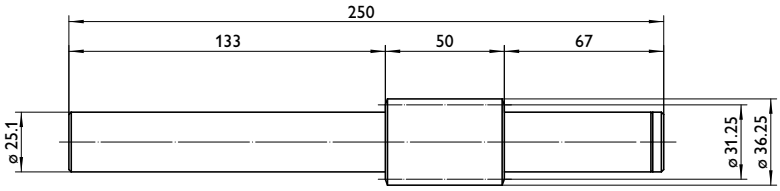

Type B

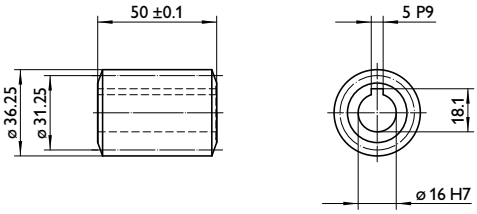

Geometric data

Translation [i]	Module	Number of gears	Number of teeth	Art. No. Shank worm	Art. No. Hollow worm	Art. No. Worm wheel	Art. No. Worm wheel rim
47:1	2.5	1	47	S 2501	B 2501	R 2501	K 2501
23.5:1	2.5	2	47	S 2502	B 2502	R 2502	K 2502
15.33:1	2.5	3	46	S 2503	B 2503	R 2503	K 2503
11.25:1	2.5	4	45	S 2504	B 2504	R 2504	K 2504
8.6:1	2.5	5	43	S 2505	B 2505	R 2505	K 2505
6.83:1	2.5	6	41	S 2506	B 2506	R 2506	K 2506
5.57:1	2.5	7	39	S 2507	B 2507	R 2507	K 2507
4.63:1	2.5	8	37	S 2508	B 2508	R 2508	K 2508

Worm gear sets

Fine toothed

Type R

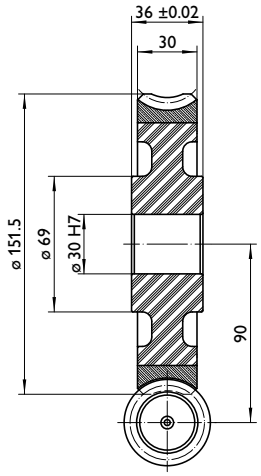

Type K

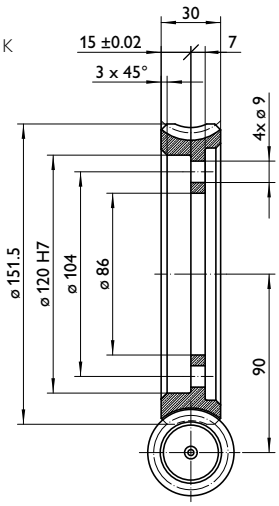

Type S

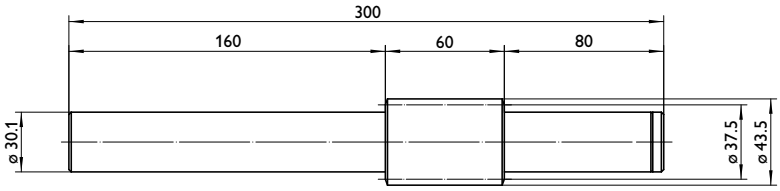

Type B

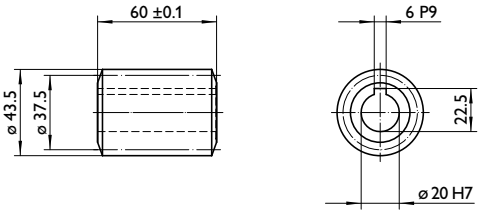

Material
Wheel in CuZN40A12
Worm shaft ESP65
Hollow worm ESP65

Toothing
Pressure angle α = 20°
fine toothed

Quality
8f24 DIN ISO 1328 / DIN 3963/67

Geometric data

Translation [i]	Module	Number of gears	Number of teeth	Art. No. Shank worm	Art. No. Hollow worm	Art. No. Worm wheel	Art. No. Worm wheel rim
47:1	3.0	1	47	S 3001	B 3001	R 3001	K 3001
23.5:1	3.0	2	47	S 3002	B 3002	R 3002	K 3002
15.33:1	3.0	3	46	S 3003	B 3003	R 3003	K 3003
11.25:1	3.0	4	45	S 3004	B 3004	R 3004	K 3004
8.6:1	3.0	5	43	S 3005	B 3005	R 3005	K 3005
6.83:1	3.0	6	41	S 3006	B 3006	R 3006	K 3006
5.57:1	3.0	7	39	S 3007	B 3007	R 3007	K 3007
4.63:1	3.0	8	37	S 3008	B 3008	R 3008	K 3008

a=105 mm

Worms and worm gears

Q8

Worm gear sets

Fine toothed

Type R

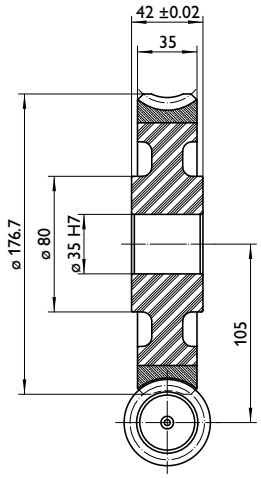

Type K

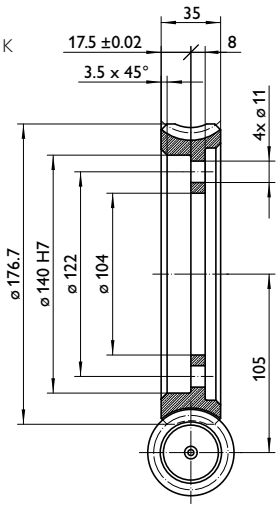

Type S

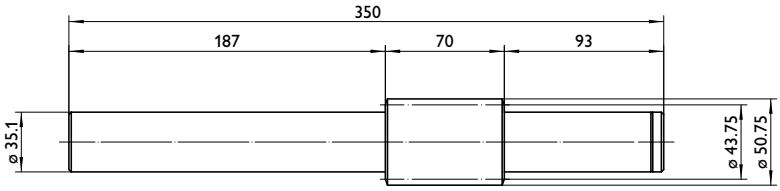

Type B

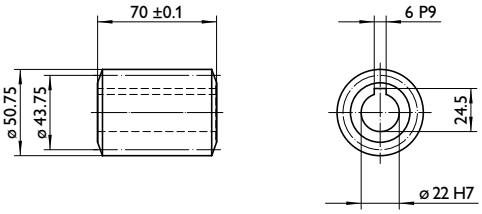

Material
Wheel in CuZN40A12
Worm shaft ESP65
Hollow worm ESP65

Toothing
Pressure angle α = 20°
fine toothed

Quality
8f24 DIN ISO 1328 / DIN 3963/67

Geometric data

Translation [i]	Module	Number of gears	Number of teeth	Art. No. Shank worm	Art. No. Hollow worm	Art. No. Worm wheel	Art. No. Worm wheel rim
47:1	3.5	1	47	S 3501	B 3501	R 3501	K 3501
23.5:1	3.5	2	47	S 3502	B 3502	R 3502	K 3502
15.33:1	3.5	3	46	S 3503	B 3503	R 3503	K 3503
11.25:1	3.5	4	45	S 3504	B 3504	R 3504	K 3504
8.6:1	3.5	5	43	S 3505	B 3505	R 3505	K 3505
6.83:1	3.5	6	41	S 3506	B 3506	R 3506	K 3506
5.57:1	3.5	7	39	S 3507	B 3507	R 3507	K 3507
4.63:1	3.5	8	37	S 3508	B 3508	R 3508	K 3508

Worm gear sets

Fine toothed

Type R

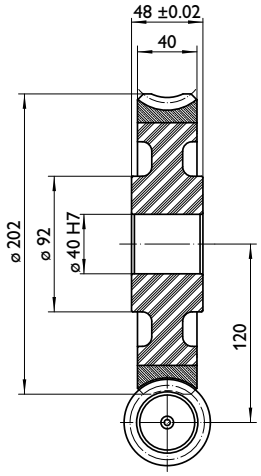

Type K

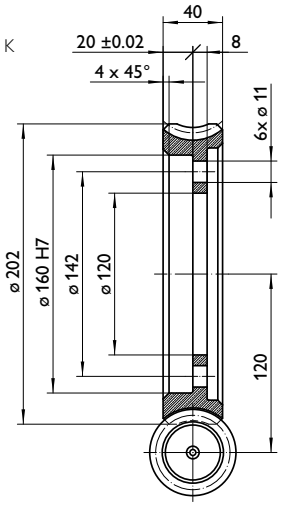

Type S

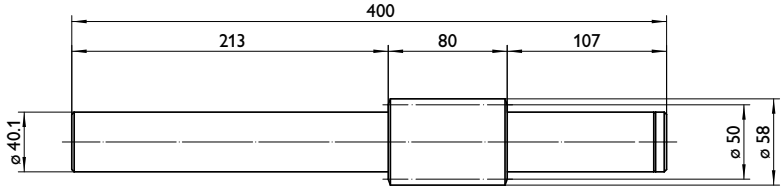

Type B

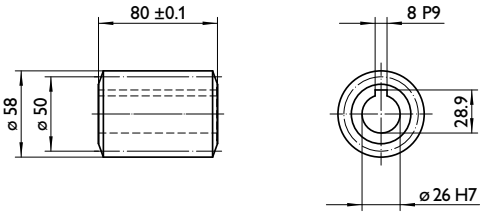

Material
Wheel in CuZN40A12
Worm shaft ESP65
Hollow worm ESP65

Toothing
Pressure angle α = 20°
fine toothed

Quality
8f24 DIN ISO 1328 / DIN 3963/67

Geometric data

Translation [i]	Module	Number of gears	Number of teeth	Art. No. Shank worm	Art. No. Hollow worm	Art. No. Worm wheel	Art. No. Worm wheel rim
47:1	4.0	1	47	S 4001	B 4001	R 4001	K 4001
23.5:1	4.0	2	47	S 4002	B 4002	R 4002	K 4002
15.33:1	4.0	3	46	S 4003	B 4003	R 4003	K 4003
11.25:1	4.0	4	45	S 4004	B 4004	R 4004	K 4004
8.6:1	4.0	5	43	S 4005	B 4005	R 4005	K 4005
6.83:1	4.0	6	41	S 4006	B 4006	R 4006	K 4006
5.57:1	4.0	7	39	S 4007	B 4007	R 4007	K 4007
4.63:1	4.0	8	37	S 4008	B 4008	R 4008	K 4008

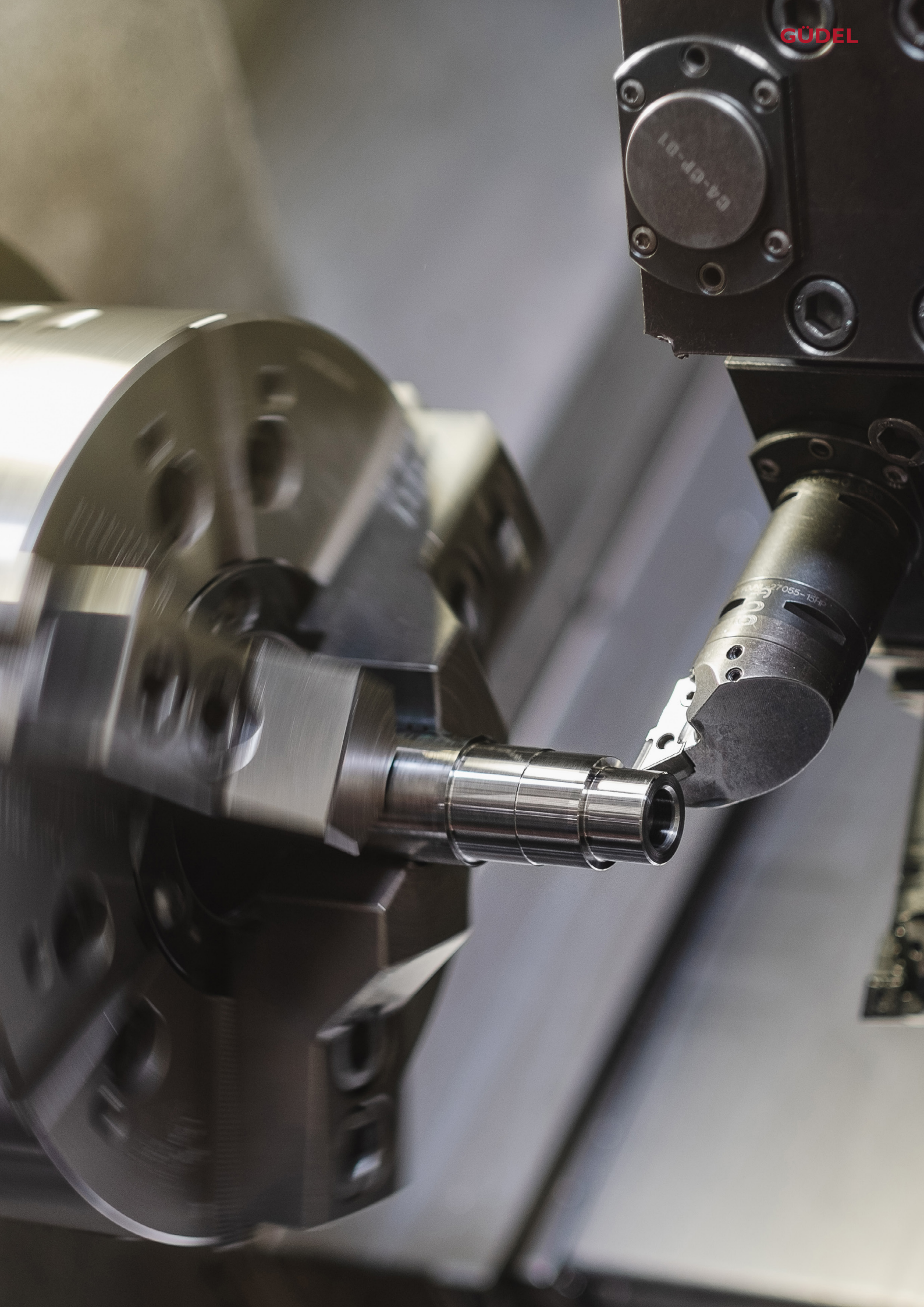
GÜDEL

Bevel gears and bevel gearboxes

GÜDEL

Bevel gears, straight toothed

Fine toothed

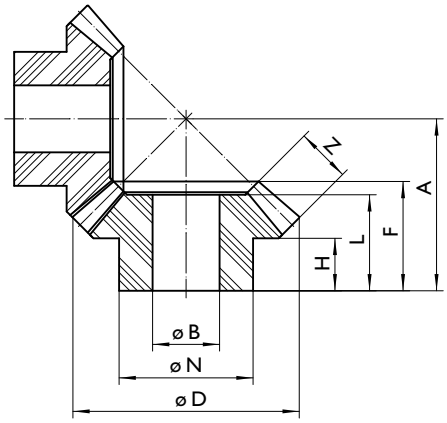

Material
C45 DIN 1.1191

Toothing
Pressure angle α = 20°
straight toothed

Quality
8f24

Geometric data

m_n	z	B_{H7}	N	D	H	L	F	A	Z	Art. No.
1.5	**16**	8	19	26.1	9.5	15.4	16.9	24	5.9	K 1100
2.0	**16**	10	22	34.8	9.5	16.4	18.9	28	8.6	K 1101
2.5	**16**	13	30	43.5	10.0	18.3	21.3	33	10.1	K 1102
3.0	**16**	16	35	52.2	12.5	22.6	26.1	40	12.5	K 1103
3.5	**16**	19	40	60.9	15.0	26.6	30.1	47	13.2	K 1104
4.0	**16**	22	45	69.7	17.5	30.3	35.3	54	16.4	K 1105
4.5	**16**	25	50	78.4	19.5	34.7	40.2	61	18.7	K 1106
5.0	**16**	27	54	87.1	21.0	37.6	43.6	67	19.3	K 1107
5.0	**19**	30	60	102.1	23.5	43.0	49.0	77	24.4	K 1108
5.0	**22**	33	66	117.1	24.0	46.0	52.0	85	27.9	K 1109
5.0	**26**	36	72	137.1	25.0	50.0	56.0	96	32.2	K 1110
5.0	**30**	40	80	157.1	28.0	57.0	63.0	109	37.8	K 1111

m_n: Normal module, z: Number of teeth

1:1.25

Bevel gears

Q8

Bevel gears, straight toothed

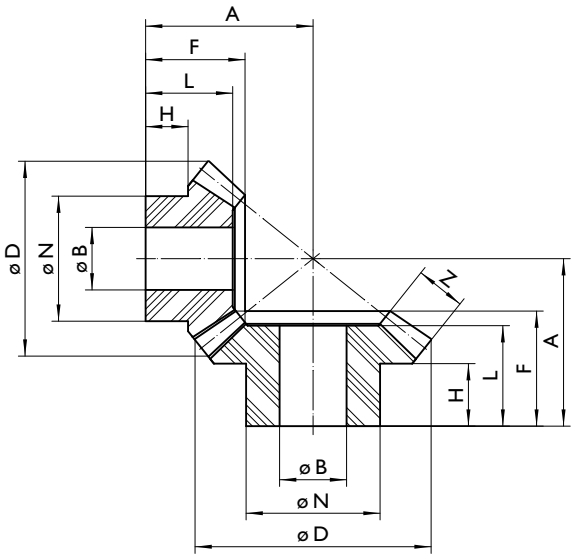

Fine toothed

Material
C45 DIN 1.1191

Toothing
Pressure angle α = 20°
straight toothed

Quality
8f24

Geometric data

m_n	z	B_{H7}	N	D	H	L	F	A	Z	Art. No.
1.5	**16** **20**	10 12	20 24	1426.4 31.9	9.5 10.4	15 16	16.8 19.0	26 26	6.7 6.7	K 1120
2.0	**16** **20**	12 14	26 28	35.1 42.5	10.7 13.0	18 20	20.9 23.6	33 33	8.9 8.9	K 1121
2.5	**16** **20**	14 16	32 34	43.9 53.1	9.9 14.0	20 23	22.8 26.3	38 38	11.2 11.2	K 1122
3.0	**16** **20**	16 18	36 40	52.7 63.8	9.3 16.0	22 26	25.7 29.9	44 44	13.4 13.4	K 1123
3.5	**16** **20**	20 22	44 48	61.5 74.4	12.2 19.0	27 31	30.7 35.5	52 52	15.7 15.7	K 1124
4.0	**16** **20**	22 24	50 52	70.3 85.0	12.5 21.0	30 34	33.6 39.2	58 58	17.9 17.9	K 1125
4.5	**16** **20**	25 27	54 58	79.0 95.6	17.0 24.0	35 40	39.6 45.9	67 67	20.1 20.1	K 1126
5.0	**16** **20**	28 30	56 60	87.8 106.2	19.0 28.0	39 45	44.5 51.5	75 75	22.4 22.4	K 1127

m_n: Normal module, z: Number of teeth

Bevel gears, straight toothed

Fine toothed

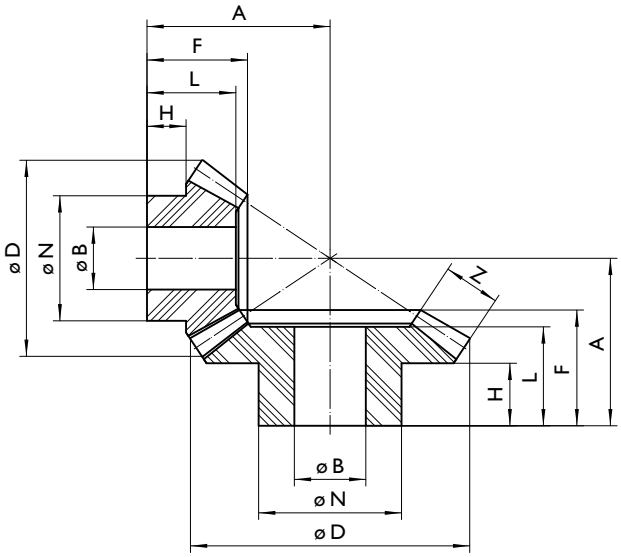

Material
C45 DIN 1.1191

Toothing
Pressure angle α = 20°
straight toothed

Quality
8f24

Geometric data

m_n	z	B_{H7}	N	D	H	L	F	A	Z	Art. No.
1.5	**16** **24**	8 10	18 22	26.5 37.7	10.0 11.5	17.8 18.5	18.8 20.0	30 27	7.6 7.6	K 1150
2.0	**16** **24**	11 13	22 26	35.3 50.2	10.0 12.0	19.1 18.7	21.1 21.7	36 31	10.1 10.1	K 1151
2.5	**16** **24**	14 16	28 32	44.1 62.8	10.5 14.0	21.9 22.6	24.4 26.4	43 38	12.6 12.6	K 1152
3.0	**16** **24**	17 19	34 38	53.0 75.3	11.0 16.5	24.7 26.5	27.7 31.0	50 45	15.1 15.1	K 1153
3.5	**16** **24**	20 23	40 46	61.8 87.9	12.5 20.5	28.5 32.4	32.0 37.7	58 54	17.7 17.7	K 1154
4.0	**16** **24**	23 26	46 52	70.6 100.4	14.0 23.0	32.2 36.3	36.2 42.3	66 61	20.2 20.2	K 1155
4.5	**16** **24**	25 29	50 58	79.4 113.0	16.5 25.0	37.0 40.2	41.5 47.0	75 68	22.7 22.7	K 1156
5.0	**16** **24**	28 32	56 64	88.3 125.5	17.5 28.0	39.8 44.3	44.8 51.8	82 75	25.5	K 1157

m_n: Normal module, z: Number of teeth

1:2

Bevel gears

Q8

Bevel gears, straight toothed

Fine toothed

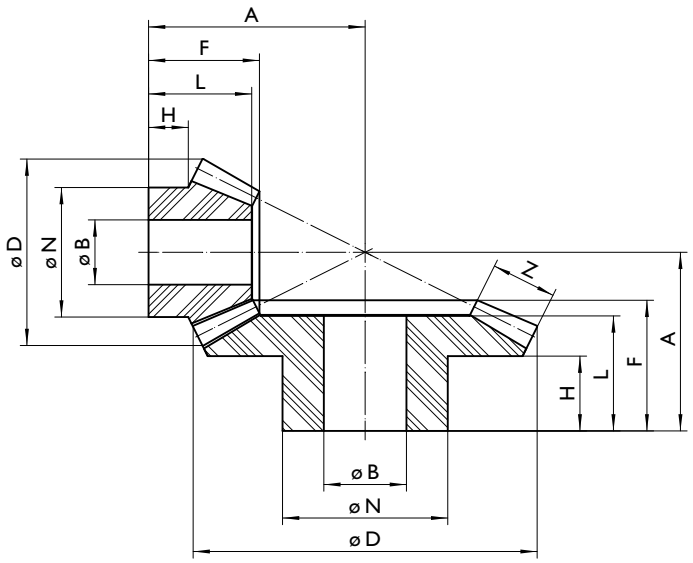

Material
C45 DIN 1.1191

Toothing
Pressure angle α = 20°
straight toothed

Quality
8f24

Geometric data

m_n	z	B_{H7}	N	D	H	L	F	A	Z	Art. No.
1.5	**15** **30**	8 11	18 24	25.2 46.3	10.4 12.0	18.8 17.6	19.8 19.6	34 26	8.8 8.8	K 1200
2.0	**15** **30**	11 14	22 28	33.6 61.8	10.0 12.4	21.6 19.6	23.1 22.4	42 31	11.7 11.7	K 1201
2.5	**15** **30**	14 18	28 36	41.9 77.2	11.2 15.8	25.5 24.8	27.3 28.3	51 39	14.7 14.7	K 1202
3.0	**15** **30**	17 22	34 44	50.4 92.7	13.2 20.1	30.5 30.9	32.6 35.1	61 48	17.6 17.6	K 1203
3.5	**15** **30**	20 25	40 50	58.8 108.1	14.4 22.5	34.4 35.1	36.9 40.0	70 55	20.5 20.5	K 1204
4.0	**15** **30**	23 30	46 60	67.1 123.6	15.5 27.8	38.4 42.2	41.2 47.8	79 65	23.5 23.5	K 1205
4.5	**15** **30**	26 34	52 68	75.5 139.0	16.7 31.1	42.2 47.4	45.4 53.7	88 73	26.4 26.4	K 1206
5.0	**15** **30**	29 37	58 74	83.9 154.65	17.8 33.5	46.2 51.5	49.7 58.5	97 80	29.3 29.3	K 1207

m_n: Normal module, z: Number of teeth

Bevel gears, straight toothed

Fine toothed

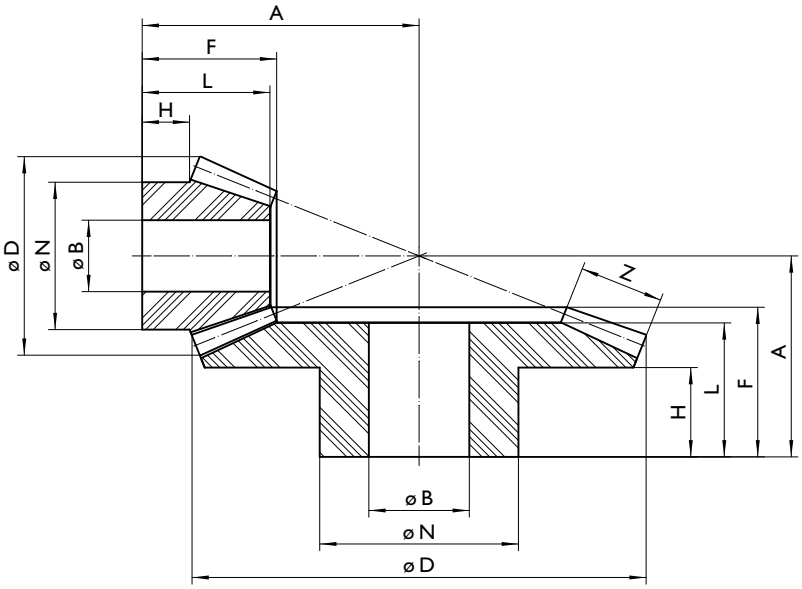

Material
C45 DIN 1.1191

Toothing
Pressure angle α = 20°
straight toothed

Quality
8f24

Geometric data

m_n	z	B_{H7}	N	D	H	L	F	A	Z	Art. No.
1.5	**16** **40**	10 15	20 20	26.8 61.1	11.3 16.0	22.0 21.1	22.9 23.1	42 30	11.3 11.3	K 1250
2.0	**16** **40**	12 18	26 36	35.7 81.5	12.7 18.0	27.3 25.2	28.4 27.9	54 37	15.1 15.1	K 1251
2.5	**16** **40**	16 22	32 44	44.6 101.9	14.4 21.0	32.7 30.2	34.1 33.5	66 45	18.9 18.9	K 1252
3.0	**16** **40**	20 27	40 54	53.6 122.2	16.4 26.0	38.1 38.2	39.7 42.2	78 56	22.6 22.6	K 1253
3.5	**16** **40**	22 32	46 64	62.5 142.6	17.0 33.0	42.2 46.3	44.3 50.9	89 67	26.4 26.4	K 1254
4.0	**16** **40**	26 35	52 70	71.4 163.0	19.6 34.0	47.9 49.3	50.0 54.9	101 73	30.2 30.2	K 1255
4.5	**16** **40**	30 40	60 80	80.4 183.3	20.6 37.0	53.2 54.3	55.6 60.3	113 81	33.9 33.9	K 1256
5.0	**16** **40**	32 45	66 89	89.3 203.7	21.2 40.0	57.6 60.3	60.3 67.0	124 90	37.7 37.7	K 1257

m_n: Normal module, z: Number of teeth

1:3

Bevel gears

Q8

Bevel gears, straight toothed

Fine toothed

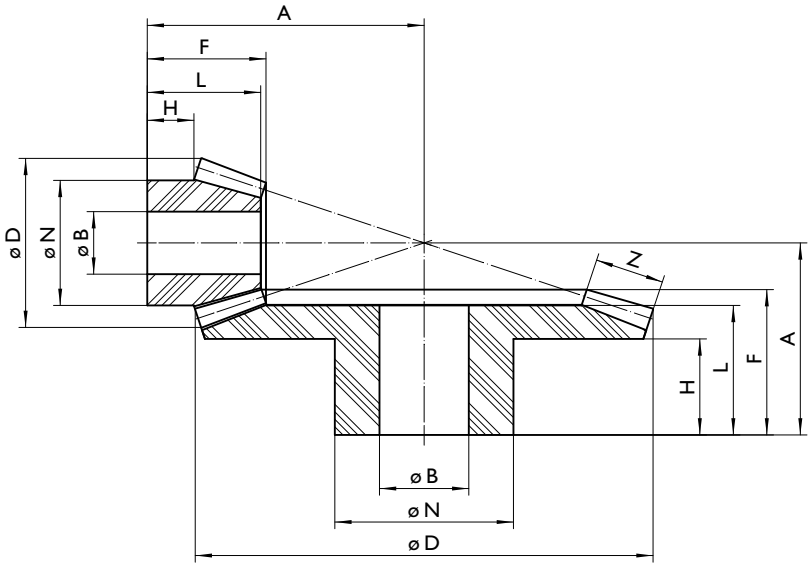

Material
C45 DIN 1.1191

Toothing
Pressure angle α = 20°
straight toothed

Quality
8f24

Geometric data

m_n	z	B_{H7}	N	D	H	L	F	A	Z	Art. No.
1.5	**15** **45**	10 15	19 30	25.3 68.4	11.7 15.0	21.1 20.8	22.3 23.0	46 30	10.3 10.3	K 1300
2.0	**15** **45**	12 17	24 34	33.8 91.3	13.0 20.0	26.5 26.9	27.4 29.7	59 39	13.8 13.8	K 1301
2.5	**15** **45**	16 24	32 48	42.2 114.1	14.8 26.0	31.4 34.8	32.6 38.3	72 50	17.2 17.2	K 1302
3.0	**15** **45**	19 28	38 56	50.7 136.9	17.3 30.0	37.3 40.7	38.7 45.0	86 59	20.6 20.6	K 1303
3.5	**15** **45**	22 32	44 65	59.1 159.7	18.9 35.0	42.3 47.8	43.9 52.7	99 69	24.1 24.1	K 1304
4.0	**15** **45**	25 36	50 72	67.6 182.5	20.3 39.0	47.3 52.9	49.0 58.4	112 77	27.5 27.5	K 1305
4.5	**15** **45**	28 40	56 80	76.0 205.3	20.9 43.0	51.0 58.7	53.1 65.0	124 86	31.0 31.0	K 1306

m_n: Normal module, z: Number of teeth

Bevel gears, straight toothed

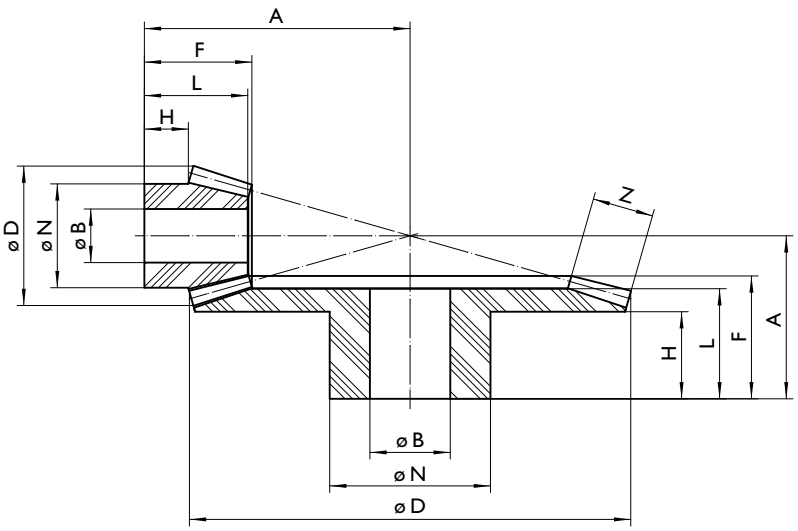

Fine toothed

Material
C45 DIN 1.1191

Toothing
Pressure angle α = 20°
straight toothed

Quality
8f24

Geometric data

m_n	z	B_{H7}	N	D	H	L	F	A	Z	Art. No.
1.5	**16** **56**	10 16	20 32	26.9 84.8	11.4 18.0	23.1 23.0	23.6 25.3	54 33	11.8 11.8	K 1350
2.0	**16** **56**	14 21	28 42	35.1 113.1	14.4 23.0	29.6 29.6	30.5 32.7	71 43	15.7 15.7	K 1351
2.5	**16** **56**	17 26	34 52	44.8 141.4	16.2 29.0	35.3 36.2	36.4 40.2	87 53	19.7 19.7	K 1352
3.0	**16** **56**	21 32	42 64	53.8 169.6	18.1 36.0	41.0 45.0	42.3 49.6	103 65	23.6 23.6	K 1353
3.5	**16** **56**	24 36	48 72	62.7 197.9	19.9 39.0	46.9 49.5	48.2 55.1	119 73	27.5 27.5	K 1354

m_n: Normal module, z: Number of teeth

1:4

Bevel gears

Q8

Bevel gears, straight toothed

Fine toothed

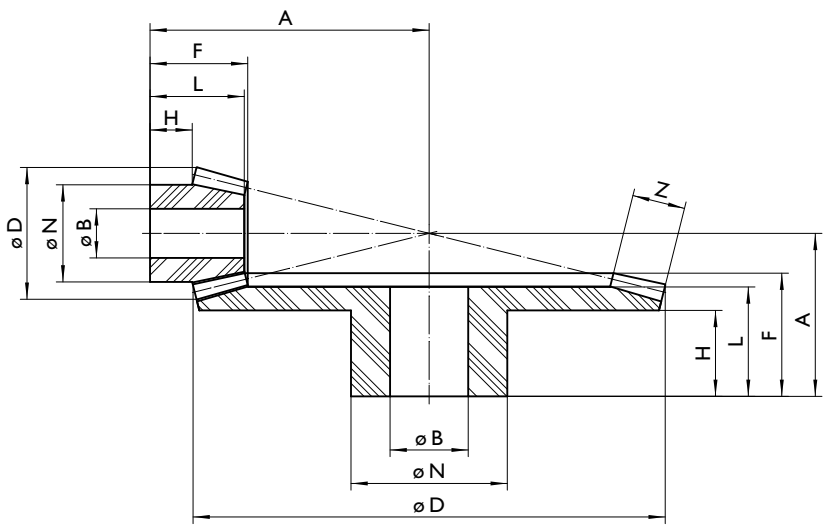

Material
C45 DIN 1.1191

Toothing
Pressure angle α = 20°
straight toothed

Quality
8f24

Geometric data

m_n	z	B_{H7}	N	D	H	L	F	A	Z	Art. No.
1.5	**15** **60**	10 16	20 32	25.4 90.7	11.7 18.0	21.5 23.0	22.2 25.4	57 33	10.2 10.2	K 1400
2.0	**15** **60**	12 21	24 42	33.9 121.0	12.3 23.0	25.6 25.6	26.6 32.8	73 43	13.6 13.6	K 1401
2.5	**15** **60**	15 25	30 50	42.2 151.2	14.1 27.5	30.9 35.0	32.0 39.3	90 52	17.0 17.0	K 1402
3.0	**15** **60**	18 30	36 60	50.8 181.5	15.9 32.5	36.0 41.5	37.3 46.7	107 62	20.4 20.4	K 1403
3.5	**15** **60**	22 35	44 70	59.3 211.7	18.9 38.5	42.2 49.4	43.7 55.1	125 73	23.8 23.8	K 1404

m_n: Normal module, z: Number of teeth

Stainless steel bevel gears

Straight toothed
Fine toothed

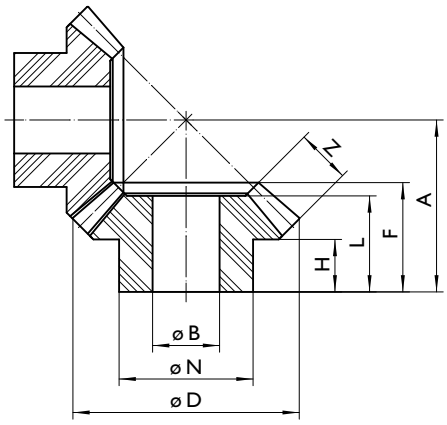

Material
X10CrNiS18 9 DIN 1.4305

Toothing
Pressure angle α = 20°
straight toothed

Quality
8f24

Geometric data

m_n	z	B_{H7}	N	D	H	L	F	A	Z	Art. No.
1.5	**16**	8	19	26.1	9.5	15.4	16.9	24	5.9	KE 1100
2.0	**16**	10	22	34.8	9.5	16.4	18.9	28	8.6	KE 1101
2.5	**16**	13	30	43.5	10.0	18.3	21.3	33	10.1	KE 1102
3.0	**16**	16	35	52.2	12.5	22.6	26.1	40	12.5	KE 1103
3.5	**16**	19	40	60.9	15.0	26.6	30.1	47	13.2	KE 1104
4.0	**16**	22	45	69.7	17.5	30.3	35.3	54	16.4	KE 1105

m_n: Normal module, z: Number of teeth

GÜDEL

Plastic bevel gears

Straight toothed fine toothed

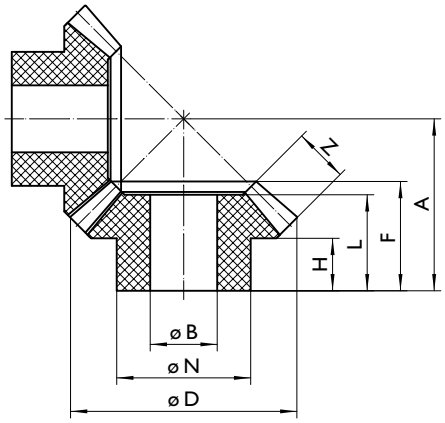

Material
Plastic PA 6

Toothing
Pressure angle α = 20°
straight toothed

Quality
8f24

Geometric data

m_n	z	B_{H7}	N	D	H	L	F	A	Z	Art. No.
1.5	**16**	8	19	26.1	9.5	15.4	16.9	24	5.9	KK 1100
2.0	**16**	10	22	34.8	9.5	16.4	18.9	28	8.6	KK 1101
2.5	**16**	13	30	43.5	10.0	18.3	21.3	33	10.1	KK 1102
3.0	**16**	16	35	52.2	12.5	22.6	26.1	40	12.5	KK 1103
3.5	**16**	19	40	60.9	15.0	26.6	30.1	47	13.2	KK 1104
4.0	**16**	22	45	69.7	17.5	30.3	35.3	54	16.4	KK 1105

m_n: Normal module, z: Number of teeth

1:2-1:4

Bevel gears

Q8

Plastic bevel gears

Straight toothed fine toothed

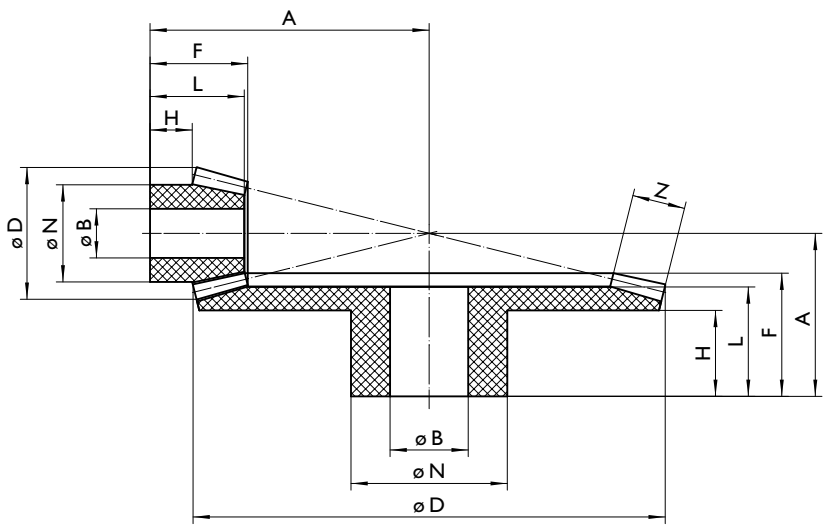

Material
Plastic PA 6

Toothing
Pressure angle α = 20°
straight toothed

Quality
8f24

Geometric data

Ratio	m_n	z	B_{H7}	N	D	H	L	F	A	Z	Art. No.
1:2	1.5	15 30	8 11	18 24	25.2 46.3	10.4 12.0	18.8 17.6	19.8 19.8	34 26	8.8 8.8	KK 1200
1:3	1.5	15 45	10 15	19 30	25.3 28.4	11.7 15.0	21.1 20.8	22.3 23.0	46 30	10.3 10.3	KK 1300
1:4	1.5	15 60	10 16	20 32	25.4 90.7	11.7 18.0	21.5 23.0	22.2 25.4	57 33	10.2 10.2	KK 1400

m_n: Normal module, z: Number of teeth

Brass bevel gears

Straight toothed fine toothed

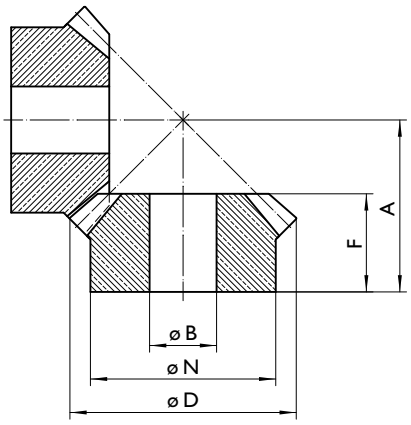

Material
Brass MS58

Toothing
Pressure angle α = 20°
straight toothed

Quality
8f24

Geometric data

m_n	z	B_{H7}	N	D	F	A	Art. No.
0.5	**20**	4	8	10.7	8.0	11	KM 1105
0.75	**20**	5	13	16.0	10.0	15	KM 1175
1.0	**20**	6	16	21.4	15.5	22	KM 1110

m_n: Normal module, z: Number of teeth

1:1

Bevel gears

Q12

Die-cast zinc bevel gears

Straight toothed

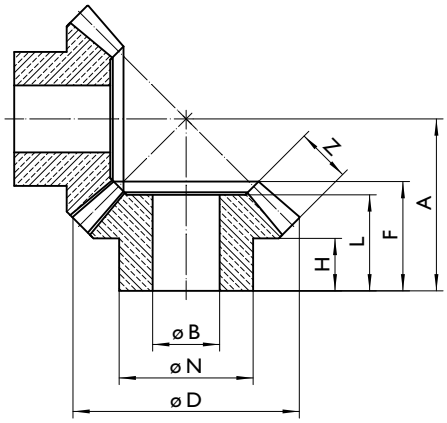

Material
ZnA14Cu1

Toothing
straight toothed

Quality
12

Geometric data

m_n	z	B_{H9}	N	D	A	H	Z	L	F	G	T_N [Ncm]	Art. No.
1.0	**16**	6	12	17.3	17.7	7.5	4.5	13.1	13.1	8	9	KD 1016
1.5	**16**	8	19	26.0	25.7	10.8	6.7	17.0	18.6	27	30	KD 1516
2.0	**16**	10	23	34.6	30.0	10.0	9.6	19.2	21.3	51	74	KD 2016
2.5	**16**	12	26	43.3	36.0	12.0	12.3	22.9	25.5	87	143	KD 2516
3.0	**16**	14	30	52.3	42.5	13.0	14.0	26.0	29.3	145	242	KD 3016
3.5	**16**	16	34	61.5	49.4	14.0	15.5	29.1	33.2	227	374	KD 3516

m_n: Normal module, z: Number of teeth, T_N [Ncm]: Transmittable torque with operating temperature <100°C

Plastic bevel gears

Straight toothed
Injection molded

Material
Plastic Hostaform C

Toothing
straight toothed

Quality
12

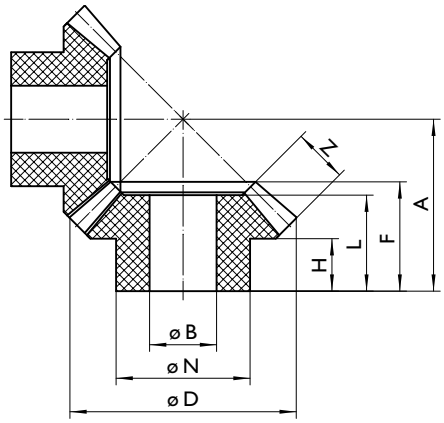

Geometric data

m_n	z	B_{H7}	N	D	H	L	F	A	Z	Art. No.
0.5	**16**	3	7.0	8.7	6.0	8.0	8.0	10.5	2.0	KH 0516
1.0	**16**	5	12.0	17.6	8.0	13.6	13.6	18.4	4.7	KH 1016
1.0	**30**	6	15.0	31.4	7.5	12.9	15.3	24.8	7.2	KH 1030
1.5	**16**	8	18.5	26.4	10.0	16.2	18.4	25.8	7.0	KH 1516
2.0	**16**	10	21.9	34.9	9.6	18.3	21.2	30.4	10.0	KH 2016
2.5	**16**	12	25.2	43.5	11.5	22.9	25.5	37.0	12.3	KH 2516
3.0	**16**	14	28.8	52.3	13.2	25.8	29.2	43.0	13.8	KH 3016
3.5	**16**	18	33.3	61.4	14.4	28.1	33.1	49.5	15.8	KH 3516

m_n: Normal module, z: Number of teeth

1:2

Bevel gears

Q12

Plastic bevel gears

Straight toothed
Injection molded

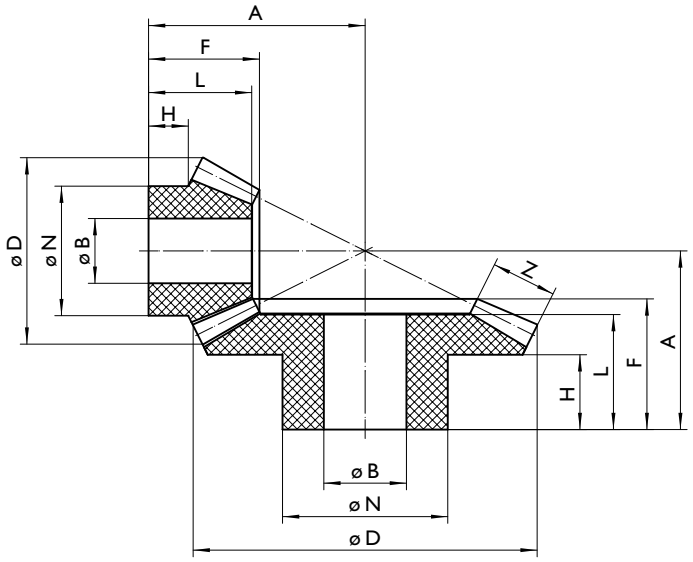

Material
Plastic Hostaform C

Toothing
straight toothed

Quality
12

Geometric data

Ratio	m_n	z	B_{H7}	N	D	H	L	F	A	Z	Art. No.
1:2	1.0	15 30	5 8	12.2 18.0	16.8 31.1	9.1	14.8	17.0 16.2	26.4 20.9	6.6	KH 101530
1:2	1.5	15 30	8 10	17.0 23.4	25.4 46.4	9.6	17.5	22.8 19.5	35.8 26.2	10.5 10.5	KH 151530
1:2	2.0	15 30	10 12	22.5 30.2	33.6 62.2	11.8	26.0 22.6	27.0 24.2	44.2 32.6	14.6 14.6	KH 201530
1:2	2.5	15 30	12 16	26.5 36.1	42.0 77.3	15.0	29.6 27.5	31.2 29.5	53.3 40.5	17.3 17.3	KH 251530
1:2	3.0	15 30	14 18	31.2 45.0	50.3 93.0	19.0	35.0 34.2	36.3 37.0	63.3 37.0	20.5 20.5	KH 301530

m_n: Normal module, z: Number of teeth

Plastic bevel gears

Straight toothed
Injection molded

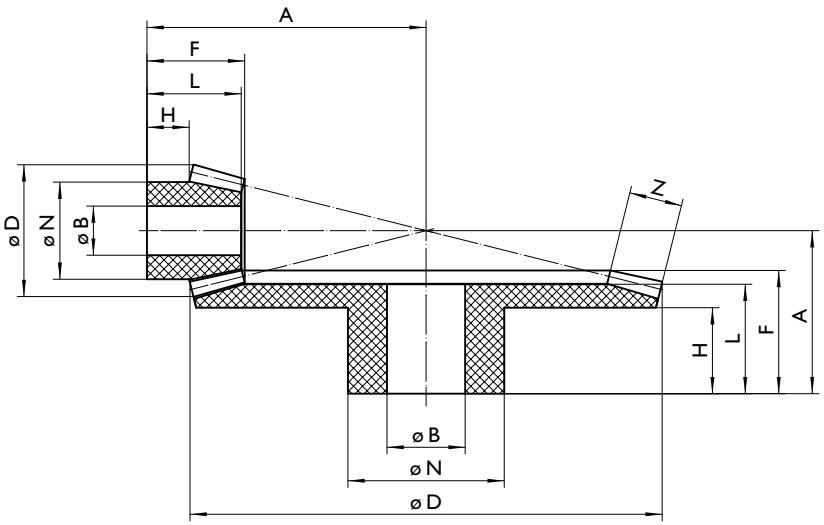

Material
Plastic Hostaform C

Toothing
straight toothed

Quality
12

Geometric data

Ratio	m_n	z	B_{H7}	N	D	H	L	F	A	Z	Art. No.
1:3	1.0	15 45	5 10	12.3 23.4	16.6 46.1	9.6	16.5	20.4 18.2	34.3 22.7	9.2	KH 101545
1:3	1.5	15 45	8 12	17.2 30.4	25.1 68.8	11.5	21.5	26.8 23.0	47.9 29.4	14.0 14.0	KH 151545
1:3	2.0	10 30	6 12	16.6 30.3	24.0 61.7	11.5	20.2	25.0 22.5	43.7 28.0	12.5 12.5	KH 201030
1:3	2.5	10 30	8 18	18.8 36.1	29.7 77.2	15.5	25.2	28.8 29.0	52.4 35.7	15.7 15.7	KH 251030
1:4	1.0	10 40	4 10	7.8 23.4	12.0 40.8	10.8	15.7	17.7 17.0	30.1 20.1	8.2	KH 101040
1:4	1.5	10 40	5 12	11.3 30.4	18.0 61.2	12.8	20.0	23.5 21.7	41.7 26.2	12.3 12.3	KH 151040
1:4	2.0	10 40	6 18	14.3 36.0	23.8 81.5	16.6	24.7	28.9 27.0	54.0 32.5	16.3 16.3	KH 201040
1:5	1.0	12 60	4 10	9.5 20.5	13.7 60.4	11.0	15.5	20.3 17.4	40.5 21.0	9.5 9.5	KH 101260

m_n: Normal module, z: Number of teeth

1:1

Bevel gears

Q8

Bevel gears, helical toothed

Fine toothed

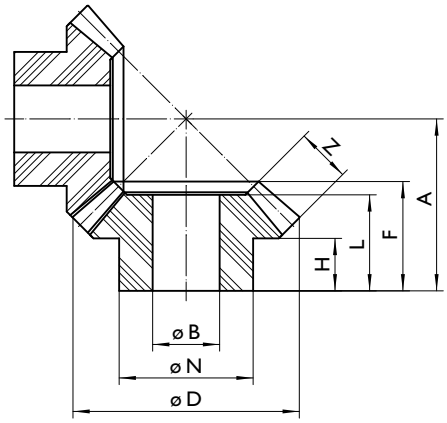

Material
C45 DIN 1.1191

Toothing
Pressure angle α = 20°
helical toothed

Quality
8f24

Geometric data

m_n	z	B_{H7}	N	D	H	L	F	A	Z	Art. No.
1.5	**16**	8	19	26.1		15.4	16.9	24	5.9	SR 1100
2.0	**16**	10	22	34.8	9.5	16.4	18.9	28	8.6	SR 1101
2.5	**16**	13	30	43.5	10.0	18.3	21.3	33	10.1	SR 1102
3.0	**16**	16	35	52.2	12.5	22.6	26.1	40	12.5	SR 1103
3.5	**16**	19	40	60.9	15.0	26.6	30.1	47	13.2	SR 1104
4.0	**16**	22	45	69.7	17.5	30.3	35.3	54	16.4	SR 1105
4.5	**16**	25	50	78.4	19.5	34.7	40.2	61	18.7	SR 1106
5.0	**16**	27	54	87.1	21.0	37.6	43.6	67	19.3	SR 1107
5.0	**19**	30	60	102.1	23.5	43.0	49.0	77	24.4	SR 1108
5.0	**22**	33	66	117.1	24.0	46.0	52.0	85	27.9	SR 1109
5.0	**26**	36	72	137.1	25.0	50.0	56.0	96	32.2	SR 1110
5.0	**30**	40	80	157.1	28.0	57.0	63.0	109	37.8	SR 1111

m_n: Normal module, z: Number of teeth

Angular drive for small loads

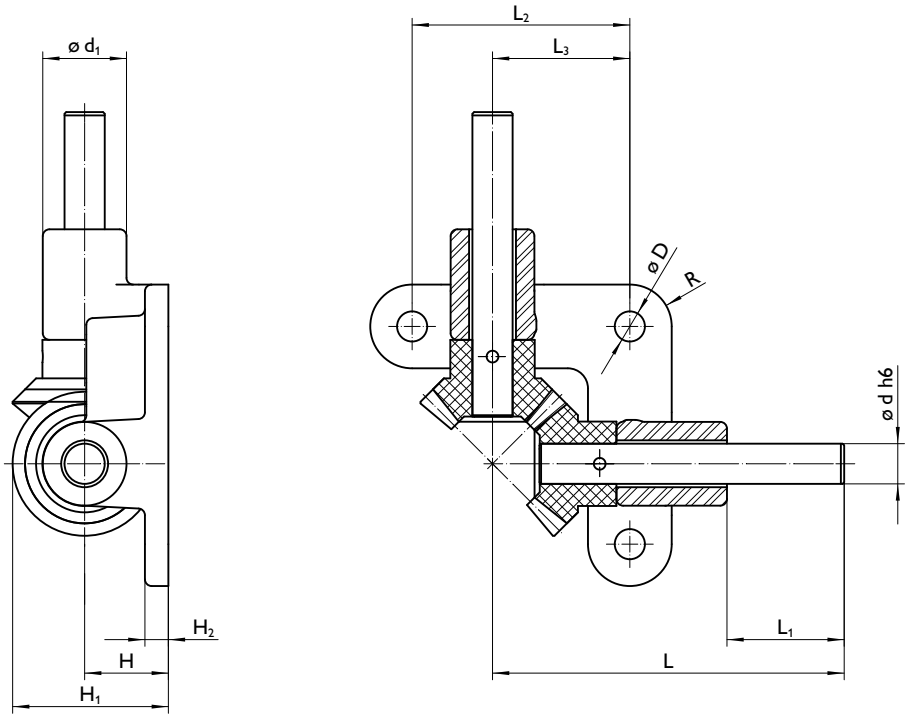

The type PV miter gear is suitable for small loads and intermittent operation.

The bearing body is made of die-cast aluminum with integrated self-lubricating bearing. The bevel gear set is injection molded from POM plastic.

The miter gear is maintenance-free.

Quality
12e28 DIN ISO 1328 / DIN 3963/67

Geometric data

d_{h6}	L	L_1	L_2	L_3	D	R	H	H_1	H_2	d_1	T_N [Ncm]	m [kg]	Art. No.
5	50	15	32	19.4	4.8	6.0	10	18.8	4	12	7	0.03	PV 10
8	70	20	45	28.4	5.8	9.0	15	28.2	5	18	25	0.09	PV 15
10	90	30	55	35.0	7.0	11.0	20	37.5	6	22	60	0.20	PV 20
12	105	35	65	41.0	9.0	12.5	25	46.8	7	25	120	0.35	PV 25
15	120	40	75	47.5	9.0	15.0	30	56.2	8	30	190	0.60	PV 30
18	135	45	85	54.0	11.0	16.0	35	65.7	9	33	310	0.90	PV 35

T_N [Ncm]: Transmittable torque with $S_F = 1.4$

1:1

Angular drive

Angular drive for medium loads

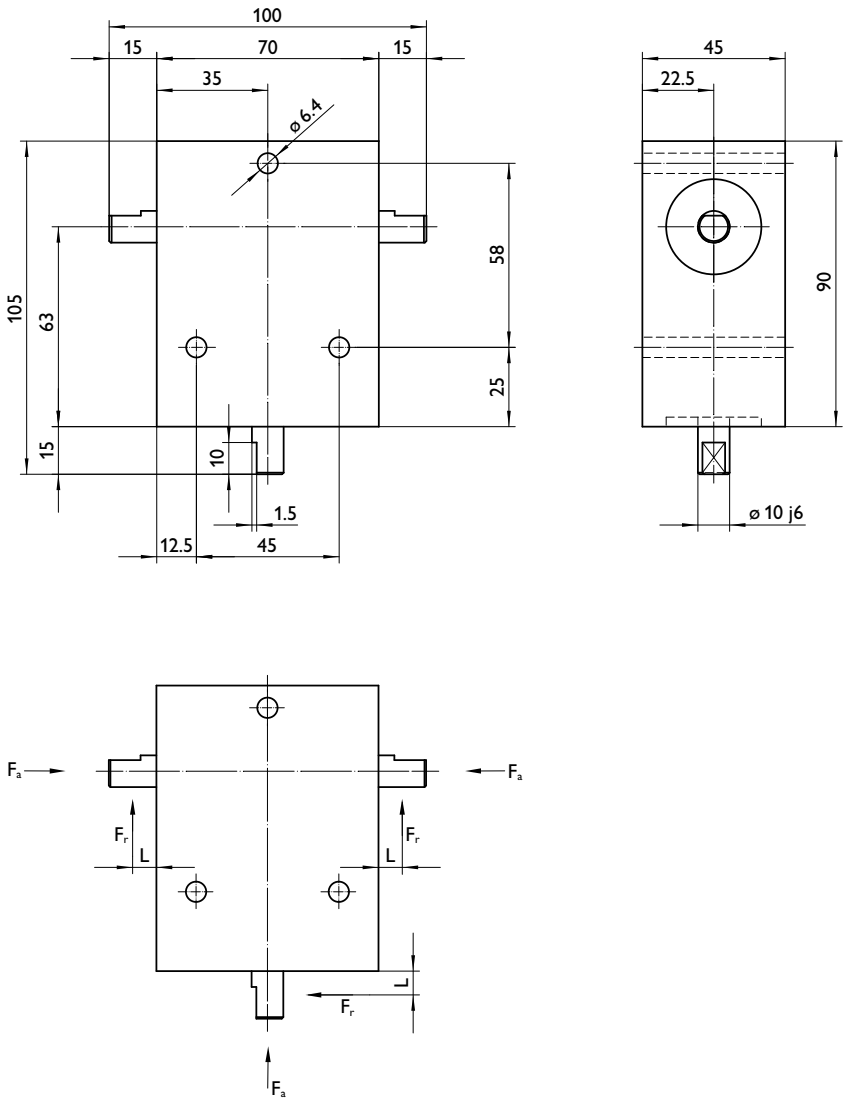

The type HKF miter gear is suitable for medium loads.

The bearing body is made of die-cast aluminum. The bearings consist of grooved bearings sealed on all sides.

The bevel gear set is made of steel, helical and fine toothed.

Permissible loads on the wear shaft
axial forces occur at the same time as high radial forces, please consult us.

F_r [N]
350

L [mm]
7.5

F_a [N]
300

Geometric data

T_N [Nm]	m [kg]	Art. No.
2.8	0.8	HKF 100 S

T_N [Nm]: Transmittable torque at 1000 rpm with SF = 1.4

Angular drive for medium loads

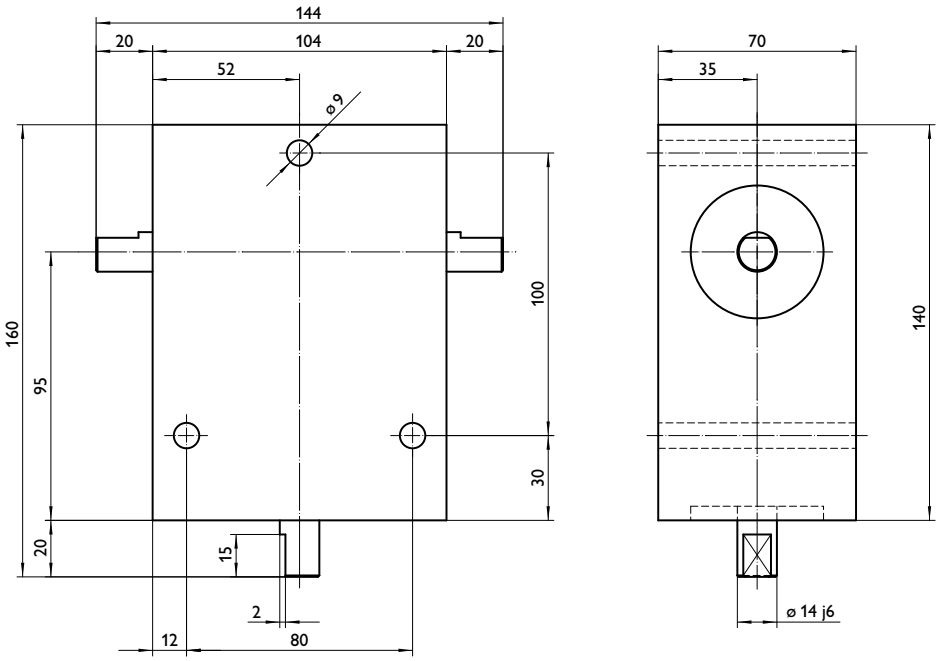

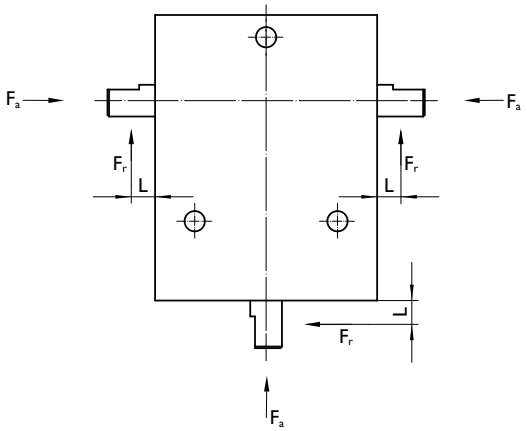

The type HKF miter gear is suitable for medium loads.

The bearing body is made of die-cast aluminum. The bearings comprise grooved bearings sealed on all sides.

The bevel gear set is made of steel, helical and fine toothed.

Permissible loads on the wear shaft
If axial forces occur at the same time as high radial forces, please consult us.

F_r [N]
800

L [mm]
10

F_a [N]
700

Geometric data

T_N [Nm]	m [kg]	Art. No.
7.3	2.9	HKF 150 S

T_N [Nm]: Transmittable torque at 1000 rpm with S_F =1.4

Racks

GÜDEL

Racks, straight toothed with metric pitch

Fine toothed

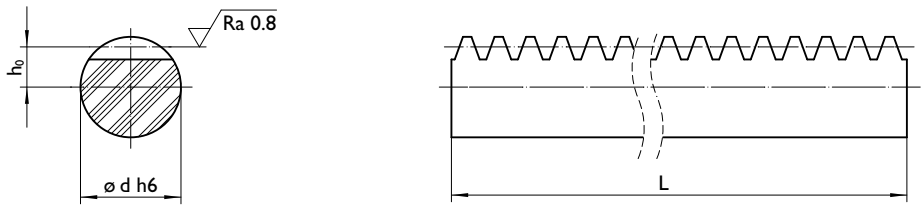

Material
ETG100

Profile
ground h6

Toothing
Pressure angle α = 20°
fine toothed

Quality
7h25 DIN ISO1328 / DIN 3963/67

F_p [mm]
Pitch total deviation

Geometric data

m_n	p	L±10	d	h_0	m [kg]	F_p	Art. No.
1.0	3.141	250	10	4	0.14	0.030	126101
1.0	3.141	500	10	4	0.28	0.039	126102
1.0	3.141	1000	10	4	0.56	0.057	126103
1.0	3.141	2000	10	4	1.12	0.093	126104
1.5	4.712	250	15	6	0.32	0.032	126111
1.5	4.712	500	15	6	0.63	0.041	126112
1.5	4.712	1000	15	6	1.26	0.059	126113
1.5	4.712	2000	15	6	2.52	0.096	126114
2.0	6.283	250	20	8	0.57	0.030	126121
2.0	6.283	500	20	8	1.13	0.036	126122
2.0	6.283	1000	20	8	2.26	0.050	126123
2.0	6.283	2000	20	8	4.52	0.077	126124
2.5	7.854	500	25	10	1.76	0.038	126132
2.5	7.854	1000	25	10	3.51	0.050	126133
2.5	7.854	2000	25	10	7.02	0.075	126134
3.0	9.425	500	30	12	2.51	0.040	126142
3.0	9.425	1000	30	12	5.02	0.051	126143
3.0	9.425	2000	30	12	10.0	0.073	126144
4.0	12.566	500	40	16	4.53	0.042	126152
4.0	12.566	1000	40	16	9.06	0.051	126153
4.0	12.566	2000	40	16	18.10	0.070	126154
5.0	15.708	500	50	20	6.83	0.040	126162
5.0	15.708	1000	50	20	13.60	0.048	126163
5.0	15.708	2000	50	20	27.30	0.062	126164
6.0	18.850	1000	50	19	14.00	0.051	126173
6.0	18.850	2000	50	19	28.00	0.065	126174

m_n: Normal module, p: Circular pitch [mm], m: Weight [kg]

Module 1.0 - 8.0

Racks

Q8

Racks, straight toothed with modular pitch

Fine toothed

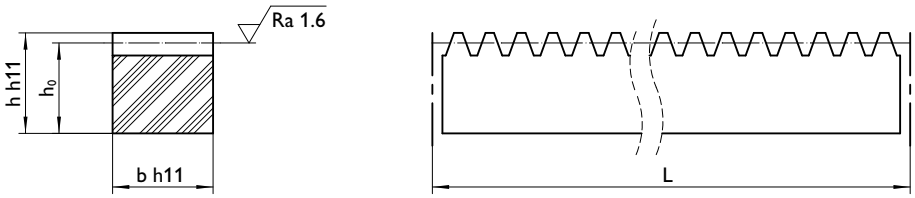

Material
C45 DIN 1.1191

Profile
cold drawn h11

Toothing
Pressure angle α = 20°
fine toothed

Quality
8h27 DIN ISO 1328 / DIN 3963/67

P_f [mm]
Tolerance of the pitch-precise cutting to length -0.05/-0.2

F_p [mm]
Pitch total deviation

Geometric data

m_n	p	L	z	b	h	h_0	m [kg]	F_p	P_f	Art. No.
1.0	3.141	251.33	80	15	15	14.00	0.14	0.046	-0.05/-0.33	124101
1.0	3.141	499.51	159	15	15	14.00	0.28	0.062	-0.05/-0.33	124102
1.0	3.141	999.03	318	15	15	14.00	0.56	0.095	-0.05/-0.33	124103
1.0	3.141	1998.05	636	15	15	14.00	1.12	0.160	-0.05/-0.33	124104
1.5	4.712	249.76	53	17	17	15.50	0.32	0.045	-0.05/-0.49	124111
1.5	4.712	499.51	106	17	17	15.50	0.63	0.057	-0.05/-0.49	124112
1.5	4.712	999.03	212	17	17	15.50	1.26	0.082	-0.05/-0.49	124113
1.5	4.712	1998.05	424	17	17	15.50	2.52	0.130	-0.05/-0.49	124114
2.0	6.283	251.33	40	20	20	18.00	0.57	0.042	-0.05/-0.66	124121
2.0	6.283	502.65	80	20	20	18.00	1.13	0.051	-0.05/-0.66	124122
2.0	6.283	999.03	159	20	20	18.00	2.26	0.069	-0.05/-0.66	124123
2.0	6.283	1998.05	318	20	20	18.00	4.52	0.106	-0.05/-0.66	124124
2.5	7.854	502.65	64	25	25	22.50	1.76	0.054	-0.05/-0.82	124132
2.5	7.854	997.46	127	25	25	22.50	3.51	0.070	-0.05/-0.82	124133
2.5	7.854	2002.77	255	25	25	22.50	7.02	0.104	-0.05/-0.82	124134
3.0	9.425	499.51	53	30	30	27.00	2.51	0.057	-0.05/-0.99	124142
3.0	9.425	999.03	106	30	30	27.00	5.02	0.073	-0.05/-0.99	124143
3.0	9.425	1998.05	212	30	30	27.00	10.00	0.104	-0.05/-0.99	124144
4.	12.566	502.65	40	40	40	36.00	4.53	0.059	-0.05/-1.32	124152
4.0	12.566	1005.31	80	40	40	36.00	9.06	0.073	-0.05/-1.32	124153
4.0	12.566	1998.05	159	40	40	36.00	18.10	0.100	-0.05/-1.32	124154
5.0	15.708	502.65	32	50	50	45.00	6.83	0.057	-0.05/-1.65	124162
5.0	15.708	1005.31	64	50	50	45.00	13.60	0.068	-0.05/-1.65	124163
5.0	15.708	2010.62	128	50	50	45.00	27.30	0.090	-0.05/-1.65	124164
6.0	18.850	999.03	53	60	60	54.00	14.00	0.072	-0.05/-1.98	124173
6.0	18.850	1998.05	106	60	60	54.00	28.00	0.092	-0.05/-1.98	124174
8.0	25.133	1005.31	40	80	80	72.00	14.00	0.067	-0.05/-2.64	124183
8.0	25.133	2010.62	80	80	80	72.00	28.00	0.082	-0.05/-2.64	124184

m_n: Normal module, p: Circular pitch [mm], m: Weight [kg]

Racks, straight toothed with modular pitch

Fine toothed

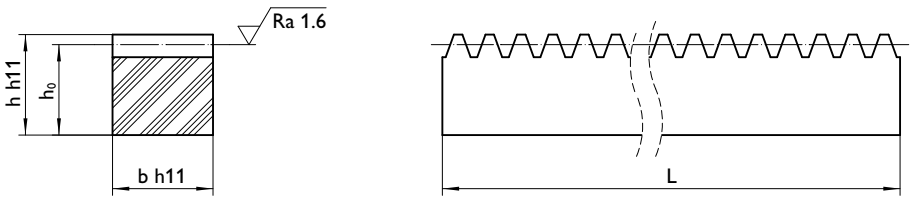

Material
C45 DIN 1.1191

Profile
cold drawn h11

Toothing
Pressure angle α = 20°
fine toothed

Quality
8h27 DIN ISO 1328 / DIN 3963/67

F_p [mm]
Pitch total deviation

Geometric data

m_n	p	L±10	b	h	h_0	m [kg]	F_p	Art. No.
1.0	3.141	500	8	8	7.00	0.22	0.062	123106
1.0	3.141	1000	8	8	7.00	0.44	0.095	123107
1.0	3.141	500	10	10	9.00	0.35	0.062	123202
1.0	3.141	1000	10	10	9.00	0.71	0.095	123203
1.0	3.141	2000	10	10	9.00	1.42	0.160	123204
1.5	4.712	500	12	12	10.50	0.49	0.057	123116
1.5	4.712	1000	12	12	10.50	0.99	0.082	123117
2.0	6.283	500	16	16	14.00	0.90	0.051	123126
2.0	6.283	1000	16	16	14.00	1.80	0.070	123127
2.5	7.854	500	20	20	17.50	1.40	0.053	123136
2.5	7.854	1000	20	20	17.50	2.80	0.070	123137
3.0	9.425	500	24	24	21.00	2.00	0.057	123146
3.0	9.425	1000	24	24	21.00	4.00	0.073	123147
4.0	12.566	500	32	32	28.00	3.00	0.059	123156
4.0	12.566	1000	32	32	28.00	6.00	0.073	123157
5.0	15.708	500	40	40	35.00	5.50	0.057	123166
5.0	15.708	1000	40	40	35.00	11.00	0068	123167
6.0	18.850	1000	50	50	44.00	17.30	0.072	123177
6.0	18.850	2000	50	50	44.00	34.60	0.092	123178

m_n: Normal module, p: Circular pitch [mm], m: Weight [kg]

Module 1.0 - 5.0

Racks

Q8

Stainless steel racks, straight toothed with modular pitch

Fine toothed

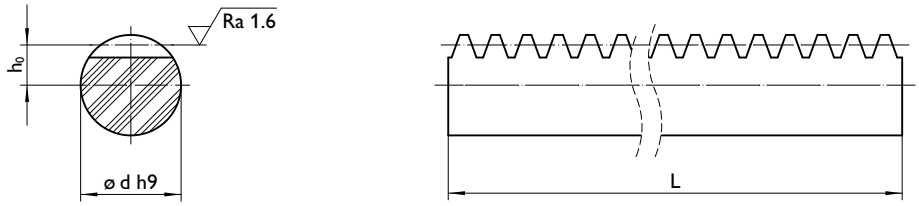

Material
X10CrNiS18 9 DIN 1.4305

Profile
cold drawn h9

Toothing
Pressure angle α = 20°
milled

Quality
6h27 DIN ISO 1328 / DIN 3963/67

F_p [mm]
Pitch total deviation
0.15/1000mm

Geometric data

m_n	p	L±10	d	h_0	m [kg]	Art. No.
1.0	3.141	500	10	4	0.28	131202
1.0	3.141	1000	10	4	0.56	131203
1.0	3.141	2000	10	4	1.12	131204
1.5	4.712	500	15	6	0.63	131212
1.5	4.712	1000	15	6	1.26	131213
1.5	4.712	2000	15	6	2.52	131214
2.0	6.283	500	20	8	1.13	131222
2.0	6.283	1000	20	8	2.26	131223
2.0	6.283	2000	20	8	4.52	131224
2.5	7.854	500	25	10	1.76	131232
2.5	7.854	1000	25	10	3.51	131233
2.5	7.854	2000	25	10	7.02	131234
3.0	9.425	500	30	12	2.51	131242
3.0	9.425	1000	30	12	5.02	131243
3.0	9.425	2000	30	12	10.00	131244
4.0	12.566	500	40	16	4.53	131252
4.0	12.566	1000	40	16	9.06	131253
4.0	12.566	2000	40	16	18.10	131254
5.0	15.708	500	50	20	6.83	131262
5.0	15.708	1000	50	20	13.60	131263
5.0	15.708	2000	50	20	27.30	131264

m_n: Normal module, p: Circular pitch [mm], m: Weight [kg]

GÜDEL
GÜDEL
GÜDEL

Güdel worldwide

GÜDEL

Contacts

Europe

Switzerland
Güdel Group AG (Headquarters)
Gaswerkstrasse 26
4900 Langenthal
Phone +41 62 916 9191
info@ch.gudel.com

Güdel AG
Gaswerkstrasse 26
4900 Langenthal
Phone +41 62 916 91 91
info@ch.gudel.com

Austria
Güdel GmbH
Schöneringer Strasse 48
4073 Wilhering
Phone +43 7226 20690 0
info@at.gudel.com

Netherlands
Güdel AG
Eertmansweg 30
7595 PA Weerselo
Phone +31 541 66 22 50
info@nl.gudel.com

Czech Republic
Güdel a.s.
Holandská 10
63900 Brno
Phone +420 519 323 431
info@gudel.cz

France
Güdel SAS
Tour de l'Europe 213
3 Bd de l'Europe
68100 Mulhouse
Phone +33 1 69 89 80 16
info@fr.gudel.com

Güdel Sumer SAS
Le Roqual
Zone industrielle
Carsac-Aillac
24200 Sarlat-la-Canéda
Phone +33 5 53 30 30 80
gudel-sumer@fr.gudel.com

Germany
Güdel Germany GmbH
Industriepark 107
74706 Osterburken
Phone +49 6291 6446 0
info@de.gudel.com

Güdel Components GmbH
Carl-Benz-Strasse 5
63674 Altenstadt
Phone +49 6047 9639 0
components@de.gudel.com

Italy
Güdel S.r.l.
Strada per Cernusco, 7
20060 Bussero (MI)
Phone +39 02 9217021
info@it.gudel.com

Poland
Güdel Sp. z o.o.
ul. Legionów 26/28
43-300 Bielsko - Biała
Phone +48 33 819 01 25
info@pl.gudel.com

Russia
Güdel AG
Yubileynaya 40
Office 1902
445057 Togliatti
Phone +7 8482 775444
info@ru.gudel.com

Spain
Güdel AG
Carrer de Sant Francesc, 4
1º 12ª
08290 Cerdanyola del Vallés,
Barcelona
Phone +34 644 347 058
info@es.gudel.com

United Kingdom
Güdel Lineartec (U.K.) Ltd.
Unit 5 Wickmans Drive
Banner Lane
CV4 9XA Coventry, West Midlands
Phone +44 24 7669 5444
info@uk.gudel.com

Americas

Mexico
Güdel TSC S.A. de C.V.
Gustavo M. Garcia 308
Col. Buenos Aires
Monterrey, N.L. 64800
Phone +52 81 8374-2500
info@mx.gudel.com

USA
Güdel Inc.
4881 Runway Blvd.
Ann Arbor, MI 48108
Phone +1 734 214 0000
info@us.gudel.com

Asia Pacific

China
Güdel International Trading Co. Ltd.
Block A, 301-302 Floor, C2 BLDG
No. 1599 New Jin Qiao Road
Pudong
Shanghai 201206
Phone +86 21 5055 0012
info@cn.gudel.com

India
Güdel India Pvt. Ltd.
Gat no. 458-459
Mauje Kasar Amboli
Pirangut, Tal.Mulshi
Pune 412 111
Phone +91 20 679 10200
info@in.gudel.com

South Korea
Güdel Lineartec Inc.
7-15 Incheon tower
daero 25beon gil.
Post no. 22013
Yeonsu gu Incheon
Phone +82 32 858 0541
info@kr.gudel.com

© Güdel AG

We have compiled this catalog for you, with its descriptions and technical specifications, with the greatest of care. Please understand that we do not accept any liability for printing errors, technical changes or consequential damage in connection with our statements. The catalog is for information purposes only, such that the illustrations and statements in no way represent guaranteed properties. The texts, photographs, drawings and any other forms of presentation shown in this catalog are the protected property of Güdel AG.

Please note that any reproduction, editing, translation, storage or other use of the catalog or its parts in print or electronic media is only permitted with the prior express consent of Güdel AG. Güdel AG reserves the right to make changes to the information provided at any time in order to keep our catalogue and products up to date.