GÜDEL

Technologies and solutions for industrial automation

PRODUCT AND SOLUTION PORTFOLIO

We are experts in getting your process moving

Güdel offers a wide range of products and solutions for a variety of industries. Our customers around the world benefit from first-class support and services via our global sales and service network throughout the entire product lifecycle.

How do we achieve this?

Güdel develops all its products to be fully functional and ready for production and manufactures all parts at its own facilities – worldwide. This high degree of in-house production gives us full control over quality, scheduling, and manufacturing costs. Our extensive engineering expertise and excellent production efficiency allow us to operate with great flexibility. The modular software used in our integrated systems is designed and developed by Güdel specialists. Güdel offers you comprehensive automation solutions – from A to Z.

With Güdel, you have one competent and reliable partner for everything – worldwide. With Güdel components, linear tracks, linear axes and gantries up to functional packages and turnkey solutions keeps your process moving.

Güdel Group

The Güdel Group is a manufacturer of high-precision machine components and provider of advanced automation solutions. The product range extends from linear guides, racks, pinions and gears to travel and linear axes through to portal robots. Güdel integrates these products into intelligent control solutions and complete automation systems. These are used in industries such as automotive and tire manufacturing, metalworking, rail, intralogistics, pharmaceutical, aerospace, and renewable energy sectors. Güdel stands for innovation, quality, and modularity.

Worldwide, the Güdel Group employs around 1,000 people across more than 20 locations. Since its founding in 1954, the company group has remained in the ownership of the founding family. The headquarters of the Güdel Group is located in Switzerland.

racks

Linear and drive technology

Developing a coherent modular system is, without question, one of the most fascinating, but certainly also one of the most difficult tasks. Güdel has mastered this challenge impressively. Components that are manufactured with precision in efficient batch sizes form the basis of our modular automation system because, just like standard parts, they can be replaced quickly, easily and safely at any time.

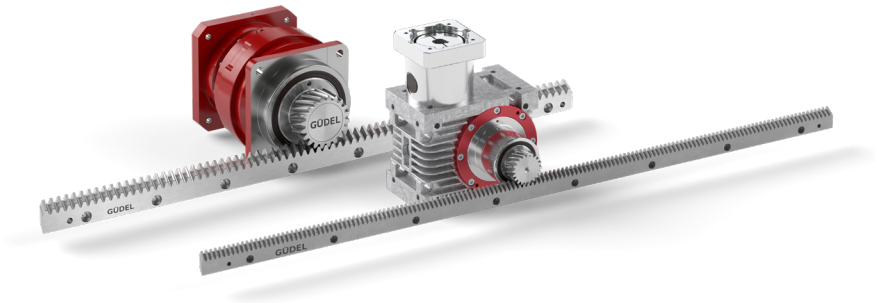

Drive train packages
The ideal drivetrain is built from a package of perfectly matched Güdel components – compact, powerful, robust, and efficient – easily integrated into a wide range of customer applications. At Güdel, you benefit from the support of our extensive experience as a components manufacturer. We are happy to support you in designing and sizing your drivetrain.

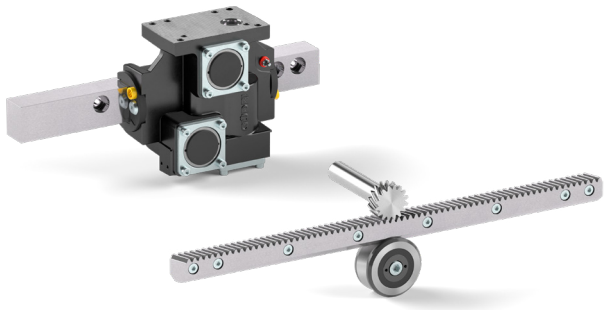

Guide packages
Güdel linear guides are particularly suitable for applications requiring high speeds, low friction, precise positioning, and smooth operation. In the medium series, both radial and axial forces can be absorbed. Additionally, our racks combine guidance and linear drive in a single element. For applications with high force requirements and increased rigidity, the heavy-duty series is the preferred choice.

Guideways
Güdel linear guideways are known for their very high performance density, smooth running and outstanding process reliability. Our precision guides enable high speeds and accelerations while allowing precise positioning of moving masses from 10 kilograms to several tons. Güdel's linear components have proven themselves especially in machine tools, handling systems, special machines and many other systems.

gearboxes

Racks
Three product lines, one goal – efficiency brought to the point. With the rack and pinion program, Güdel offers a well-thought-out portfolio for all applications – functional, precise, or highly dynamic. Combinable, standardized, and immediately available. From functional (Basic) through precise (Performance) to highly dynamic (High-End), each line is tailored to typical application areas.

Gearing parts
The extended product portfolio of gearing parts includes various types of pinions, spur gears, worm gear sets as well as bevel gears, which we offer in different qualities. We also machine components according to your individual requirements and specifications. We are also able to realize application-specific special designs according to your specifications.

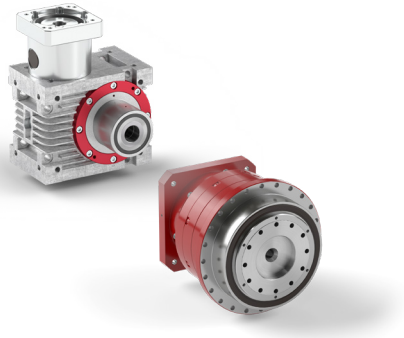

Gearboxes
Our high-performance angle gearboxes are built for demanding conditions. They are resistant to dirt and operate reliably even in applications with long stroke lengths. Güdel planetary gearboxes are the ideal choice when high power density and precision are required. They stand out for their exceptional quality, long service life, and minimal maintenance requirements.

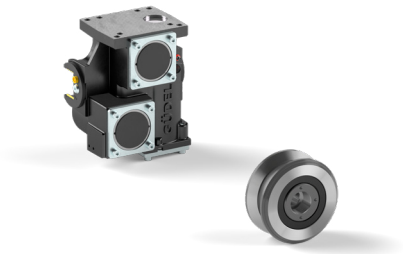

Rollers and roller guides
The Güdel rollers and roller guides ensure smooth movement across a wide range of applications, supporting safe transport and reliable processes. Optimized surface roughness and shape accuracy allow for maximum load capacity. Güdel guide rollers and profiles can handle high radial and axial loads, with high-speed, low-noise operation guaranteed. By optimizing the entire manufacturing process, we guarantee excellent service life.

Linear tracks for robots

With the linear axes CMF, TMF, TMO, and TMV, Güdel offers flexible solutions for extending the working range of robots by an additional axis. While the CMF was specifically developed for use with cobots, TMF, TMO, and TMV are designed for the requirements of classic industrial robots.

Through this extension, the production process can be optimized, efficiency increased, and the investment additionally made profitable. The horizontal and vertical linear axes are suitable for a wide range of applications and industries – with only few limitations in implementation.

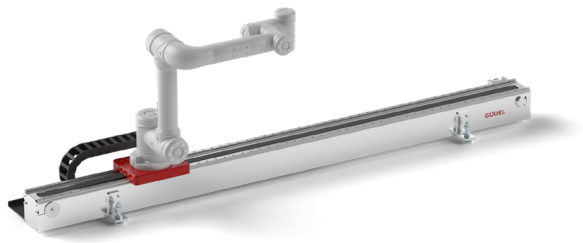

CMF – CoboMover Floor
Reliable positioning axis for small industrial robots and cobots in a wide range of applications

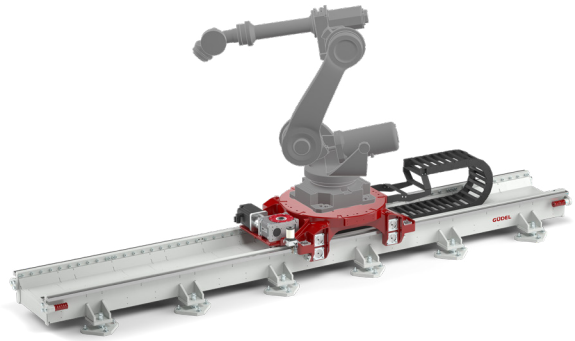

TMF – TrackMotion Floor
Versatile floor-mounted linear track for a wide range of applications such as welding, machine tending or various other handling applications

TMO – TrackMotion Overhead
Linear track for overhead mounting which enables better utilization of production space and optimal access to processes and machines

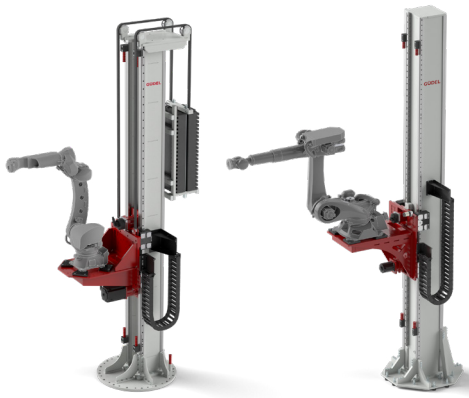

TMV – TrackMotion Vertical
Linear track allowing the vertical extension of the working envelope, like for paint or measuring applications, also combinable with floor-mounted linear tracks

Linear axis and gantries

Güdel's portal technology stands for maximum efficiency in industrial production and meets the highest demands for precision, dynamics and availability. Thanks to their modular design, the portal systems can be flexibly configured in different axis configurations – precisely tailored to individual customer requirements. Depending on your needs, the portals can range from a purely mechanical structure to a fully integrated functional package.

EP – 1-Axis-Gantry
Machine tending in various industries such as metal industry, machine tools and automotive

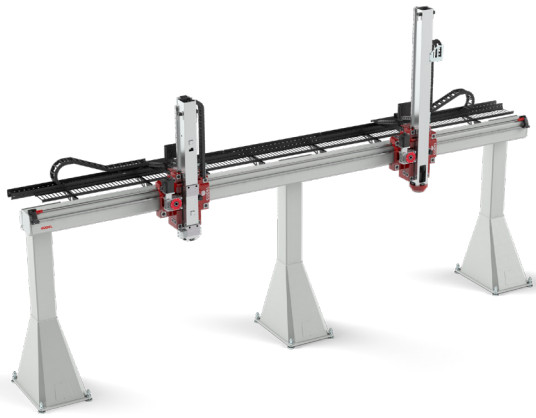

ZP – 2-Axis-Gantry
Machine tending in various industries such as metal industry, machine tools and automotive

FP – 3-Axis-Gantry
Sorting, palletizing, and commissioning applications, such as in intralogistics, tire and wheel plus any pick-and-place application – for largest work areas

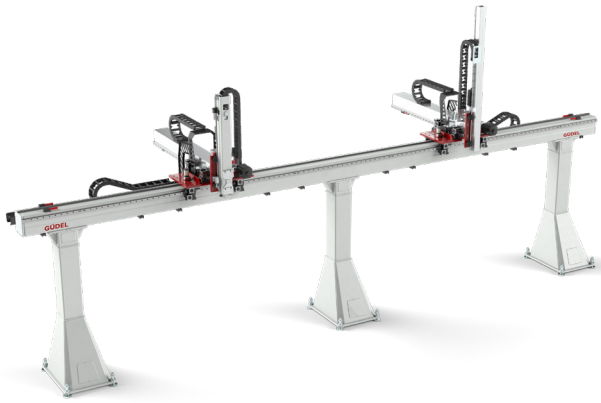

CP – 3-Axis-Gantry
Machine tending and palletizing applications in three axis with compact overall dimensions

Functional packages

Based on our modular, application-oriented function packages, we automate production processes individually from partial functions up to turnkey automation solutions. The combination of robotics, linear tracks and gantries, control systems, reliable gripper solutions and the appropriate software components guarantees optimal functionality.

Our extensive experience in fulfilling customer requirements is demonstrated by successful automation projects across a wide range of industries and applications.

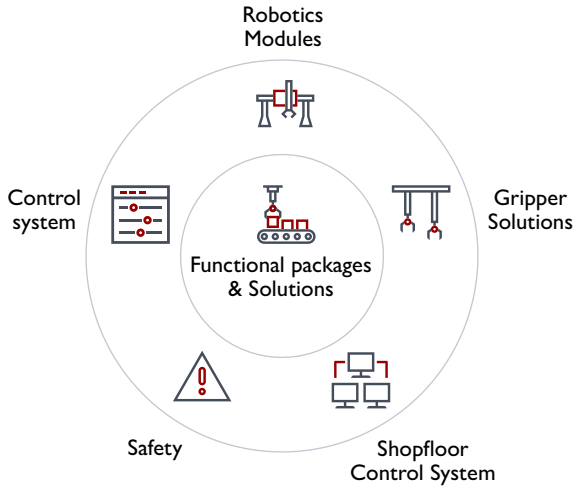

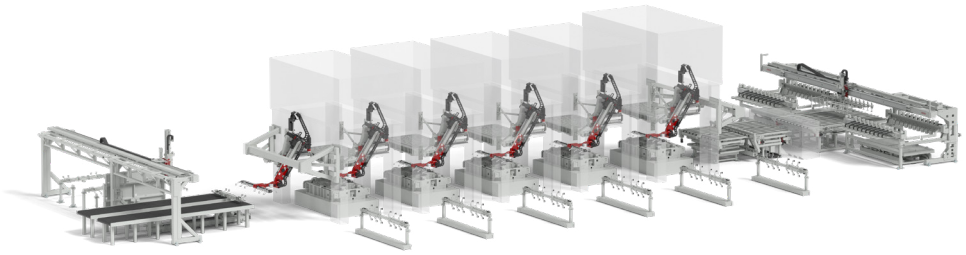

Press automation solutions
As a leading automation supplier, Güdel offers tailored solutions for all sub-processes in the area of press automation, both for tandem and transfer presses and retrofits. This includes everything from blank destacking (Front of Line), to press-to-press transfer (Press Line Transfer), and handling of finished parts (End of Line).

Railway automation solutions
Güdel is well known for its many years of expertise in the field of system solutions for the handling railway wheels and axles. The portfolio includes a patented gripper for hot wheels with temperatures up to 800 °C, maintenance equipment for wheelsets, machining and maintenance of chassis, and other applications.

Custom production automation

Güdel is the technology leader for system solutions that meet highest demands. Whether a function package or a turnkey automation system, we automate production processes based on our many years of experience and modular product system. Dynamics and precision, combined with traverse ranges and axis combinations individually tailored to suit the application result in optimal solutions and maximum customer benefits.

With our network of strategic integration partners and our own branches worldwide, we are a global niche player across a variety of industries.

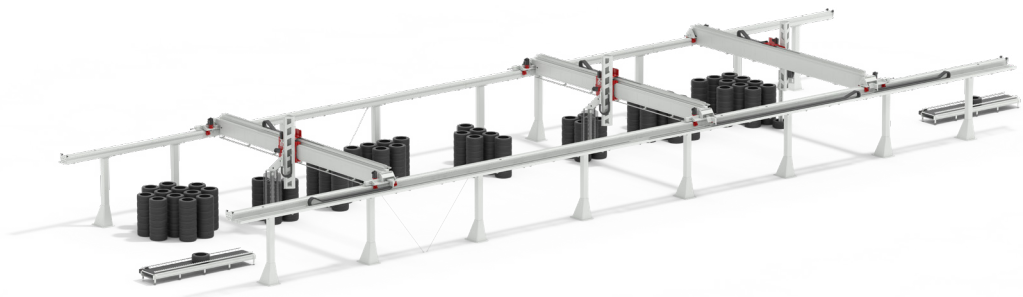

Logistic systems for the tire industry
The tire manufacturing process demands highly dynamic automation solutions. Güdel offers customized solutions especially in the area of handling and logistics of raw and finished tires. Typical applications include press loading, sorting and picking, palletizing and depalletizing.

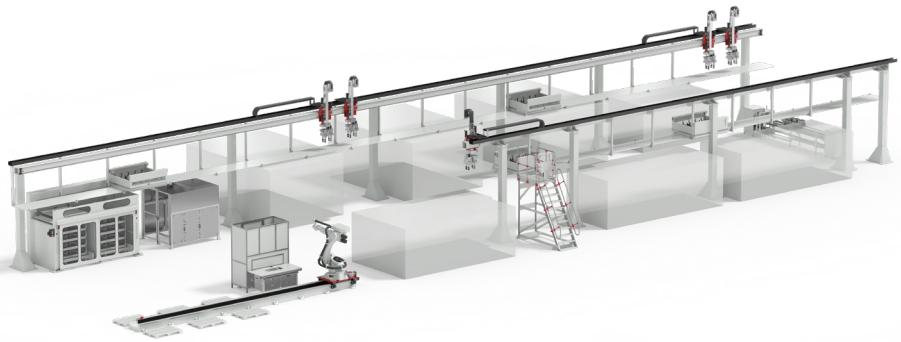

Machine tending
Güdel offers complete automation for interlinking production machines and has many years of experience in the automated production of powertrain components as well as battery manufacturing.

Data-driven innovation

Configure products in seconds, download CAD models instantly, and access all related documentation in one place. myGüdel streamlines engineering workflows, saves valuable time, and helps bring Güdel projects to life – efficiently and reliably.

Product Finder: Identifies the optimal product for your application based on load requirements, design size, and area of application.

Configurator: Assemble your product individually. The system automatically verifies the technical feasibility of your configuration.

CAD Model Generator: Obtain a 3D model for direct download in seconds – ready for integration into your system planning.

All information immediately available, full transparency regarding product specifications, precise planning foundations – without waiting times or queries.

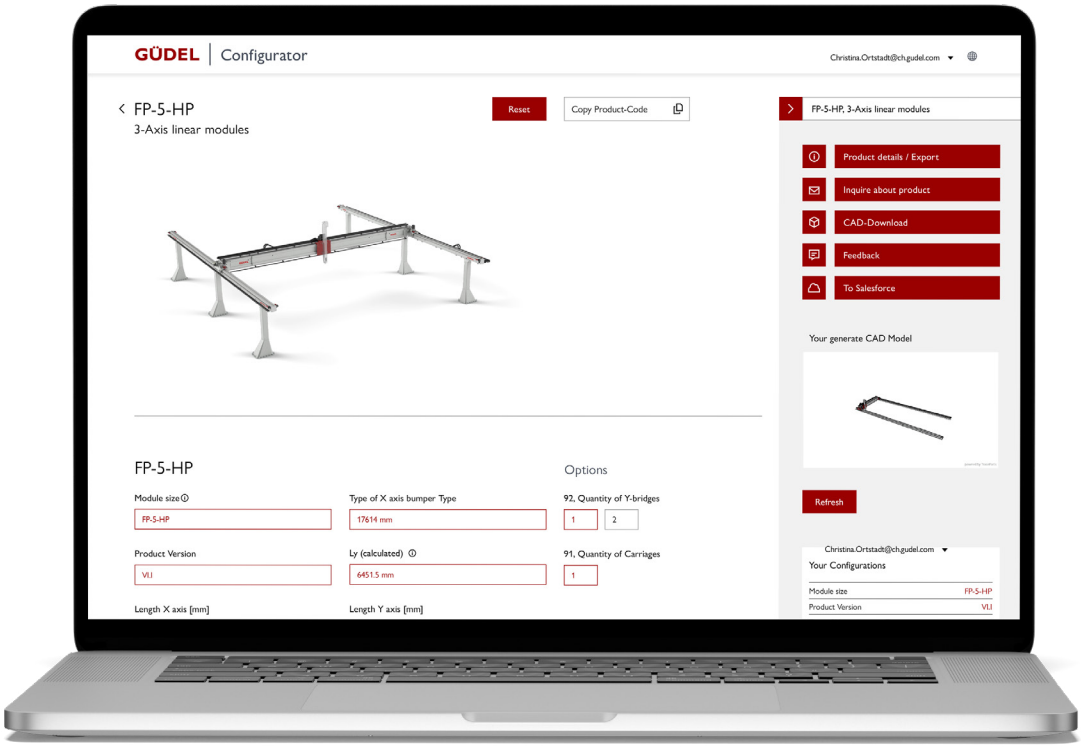

Güdel service

As a Güdel customer and owner of a Güdel system, you are very important to us. We listen to your needs and provide optimal support for your system. We possess deep and broad expertise across the entire product range and application areas – from components to full system integration.

The promise

We offer our customers a comprehensive, proactive and value-enhancing service, and this is exactly what we focus our services on. For us, service means bundling your diverse requirements into a suitable complete package. Thanks to our modular system, you will always receive services tailored specifically to your needs.

The model

Rising productivity and maximum availability of systems and machinery are only possible with prudent service. With our service concept, we support, protect and improve your system, thereby ensuring smooth production processes. At the highest level, you secure the necessary services with a clear performance mandate by establishing an agreement with us.

Support

- Care and support for the system during its entire life cycle
- Spare parts from a single source

In the event of malfunctions, we are available by phone around the clock, diagnose faults via remote maintenance, and swiftly restore the system to operation.

Protect

- Measures for safeguarding value
- Analysis of the system's condition

We maintain your system, replace wear items promptly, and plan maintenance work. Regular inspections identify weak spots before disruptions occur.

Improve

- Increase value and create added value
- Increase productivity and efficiency
- Training courses for professional operation

We optimize the system's processes and workflows. We use extension and modernization solutions to convert systems for new requirements.

Secure

- Contractual protection
- Secure benefits
- Comprehensive service

We configure suitable service products to facilitate medium- and long-term maintenance and support planning. Our specialists perform periodic equipment assessments and provide preventive maintenance recommendations.

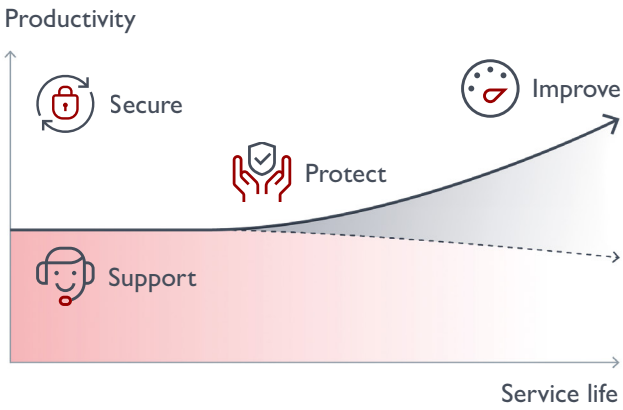

Swiss automation since 1954

Engineered and made in Switzerland
We have stood for the highest quality and reliability for over 70 years.

Intelligent and complete solutions
From individual components to complete automation solutions – everything from one single source.

Highest precision and maximum accuracy
In-house manufactured linear guides, racks, pinions and gearboxes for maximum precision – that is in our DNA.

Transporting heavy loads over long distances
Market leader in moving loads of up to 3 tons over 100 meters.

Future-oriented with tradition
Durable products for sustainable efficiency – proven and tested over many years.

Global presence, local expertise
With around 1,000 employees working worldwide at over 20 locations.

Güdel Group AG
Gaswerkstrasse 26
4900 Langenthal
Switzerland
+41 62 916 91 91
info@ch.gudel.com

gudel.com
automation on track

EN | 03.26 | 10468421