GÜDEL

High precision planetary gearboxes

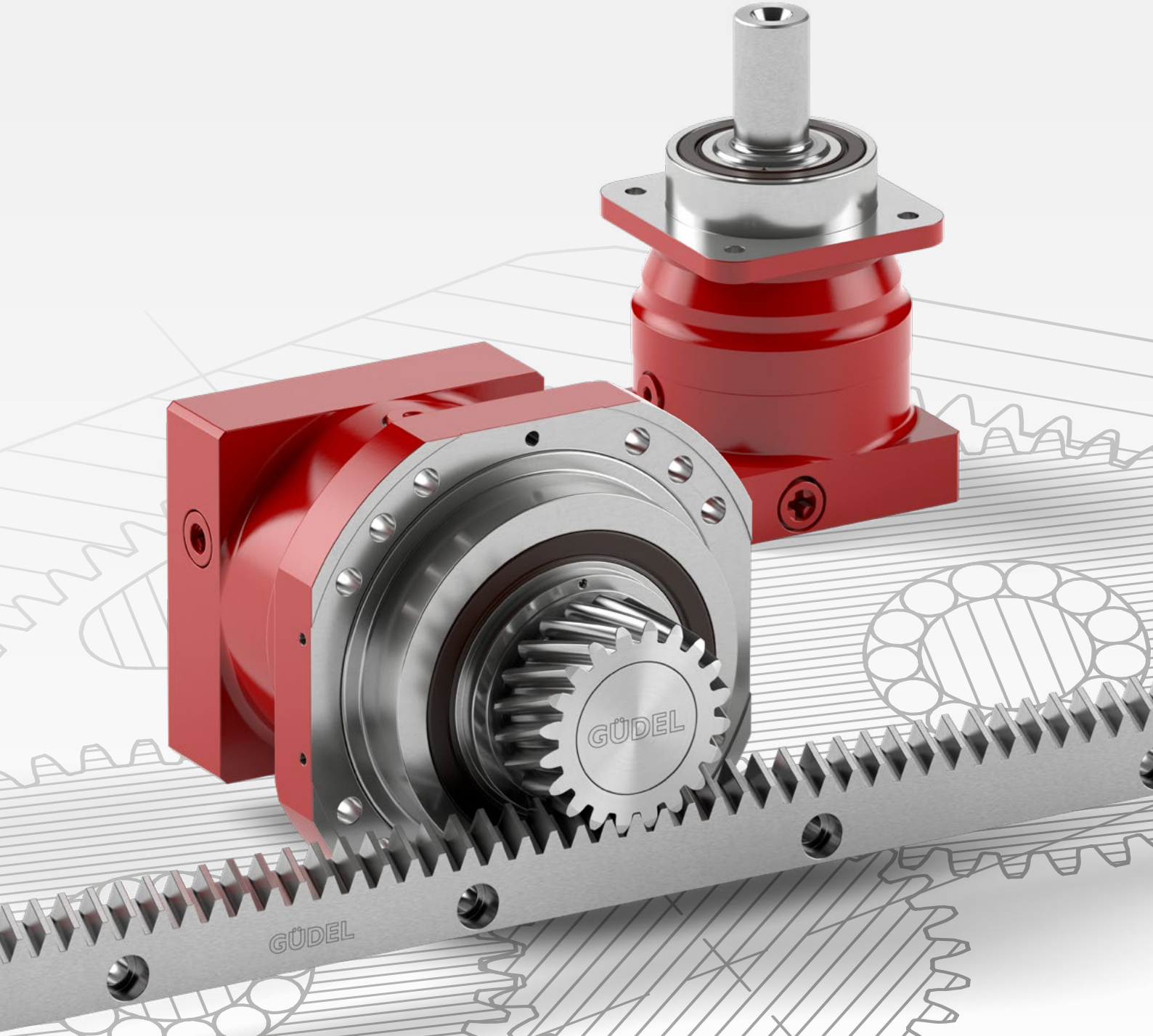

High precision planetary gearboxes

GÜDEL

GÜDEL

Content

High precision planetary gearboxes

Insights Products meet industry 6
Product overview Take six – The product at a glance 8
GAdjustment NGHP – An innovative system solution 10
Performance Six types to cover a wide range of application requirements 12
Preselection Make your decision – Range, speed & torque 14
Inputs Great adaptability – Standard & optional inputs 16
Outputs Unlimited flexibility – Standard and optional outputs 18
Positioning Reliability – Regardless of the mounting position 20
Function packages Your ideal drive train – Gearbox, rack & pinion 22
Configuration Find your right size – Performance & configuration 24
Configuration Find your right configuration – Available inputs and outputs 26

Technical data sheets

Type NRH 30
Type NRHP 42
Type NGHP 54
Type NR 66
Type SR 78
Type PR 98

Your ideal drive train

Pinion – helical teeth 120
Rack – helical teeth 121

Technical information

Order reference Generate the code of your planetary gearbox 128
Order reference Choose your appropriate motor interface 130
Flowcharts Calculate your planetary gearbox 132
Flowcharts Calculate your ideal drive train 136

Güdel worldwide

Contacts 140

Products meet industry

Güdel offers a wide range of products and solutions to key industries. Our global sales and service network provides our customers with first-class consultation and support services around the globe, for the entire product life cycle.

Güdel gearboxes are available in four different precision grades. Combined with the appropriate rack, available in three quality classes Q6, Q7 and Q9, an ideal drivetrain can be configured according to the application requirements.

Güdel in every axis

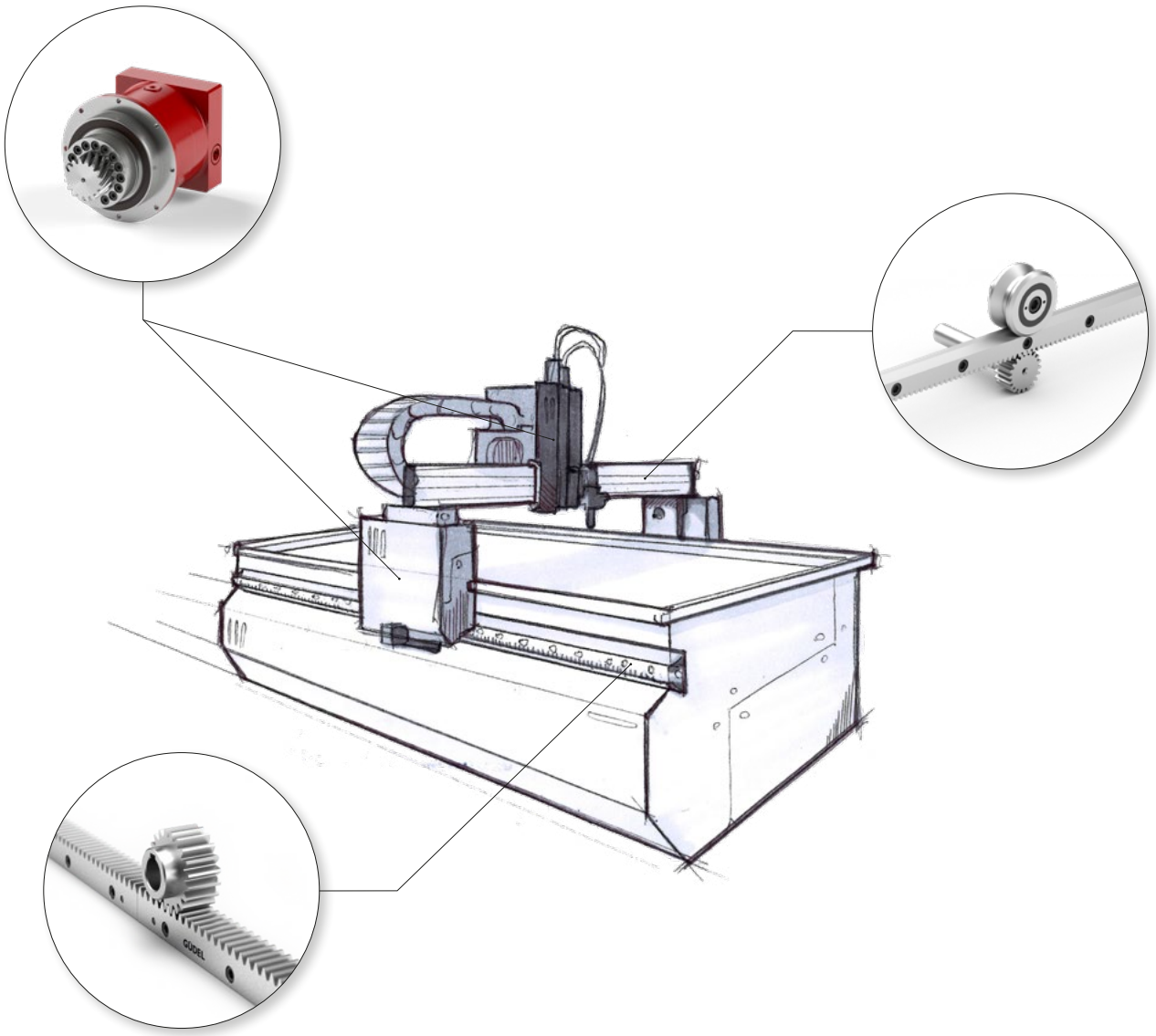

Industries

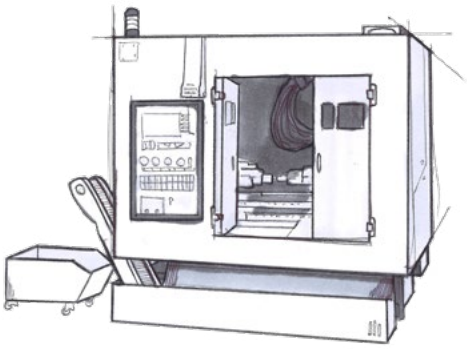

Machine tools

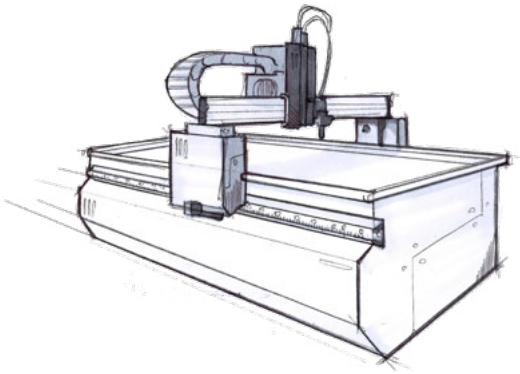

Cutting machines
laser, plasma, water, glass

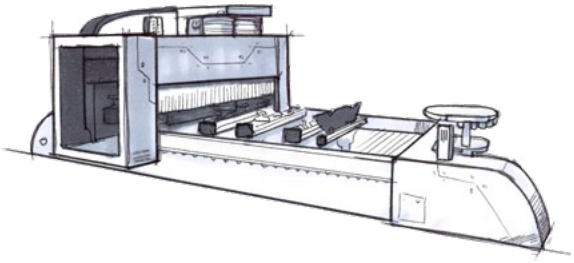

Wood, plastic and composite
processing machines

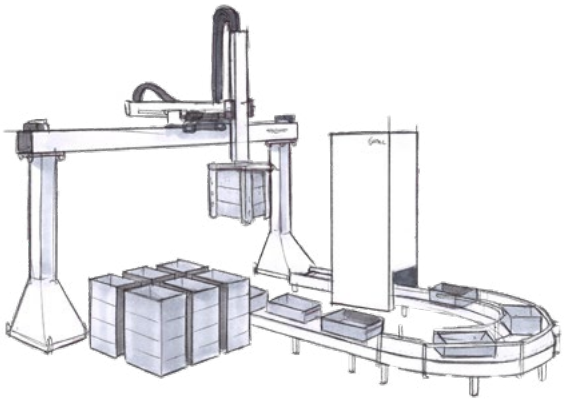

Robotics, automation and
handling technology

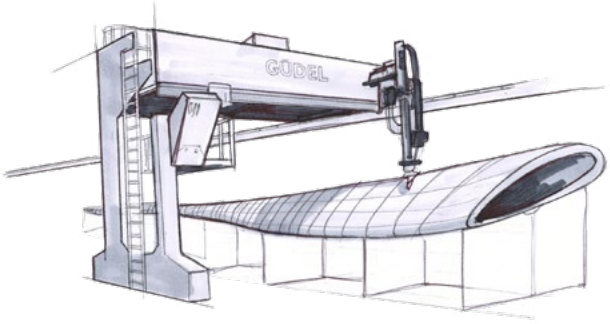

Wind and energy

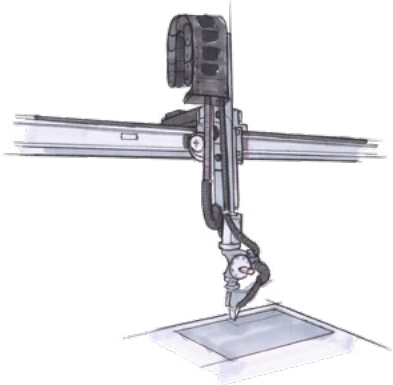

Aerospace and defense technology

Take six – The product at a glance

Due to their outstanding mechanical properties, planetary gearboxes are found in a wide spectrum of industrial applications. Güdel high-precision planetary gearboxes provide the ideal solution for demanding operations. Performance details and drawings are found on the technical datasheets.

Precision – With regard to angular backlash, our extensive experience in the design and the manufacture of high-performance gearboxes gives us the ability to provide all products in four different precision grades: 1, 3, 5 and 12 arcmin

Sizes – Our portfolio includes five sizes: 080, 100, 140, 180 and 240. Additional sizes are available upon request.

Ratios – A wide range of ratios can be selected – starting from 3 up to 1000. Depending on the ratio the gearbox will either have one, two or three stages.

NRH, NRHP and NGHP

NRH type – For high precision

The NRH planetary gearbox with optimized helical gearset teeth was developed for highly demanding applications. These gearbox is perfect for applications ranging from basic machine design to printing, packaging, and robotics. Designed for high speed and acceleration – and for perfect production flows.

NRHP type – For high stiffness

The NRHP flange mount planetary gearbox offer superior torsional stiffness and tilt rigidity, perfectly suited for high precision processes and production flows.

NGHP type – For smart adjustment

The planetary gearbox NGHP is built on the proven technology of the Güdel NRHP series planetary gearboxes. The unique interface, together with the web application GAdjuster guarantees a precise, simple, and error free gear mesh adjustment for rack and pinion drive train.

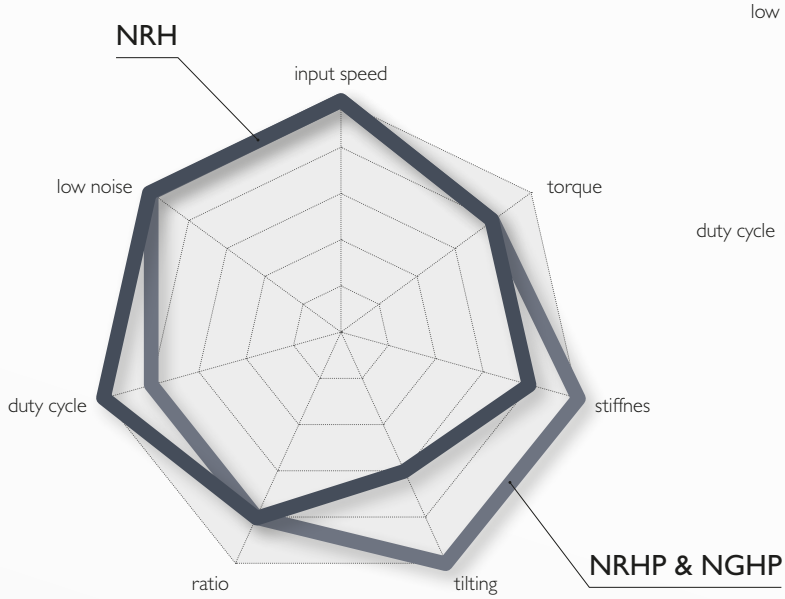

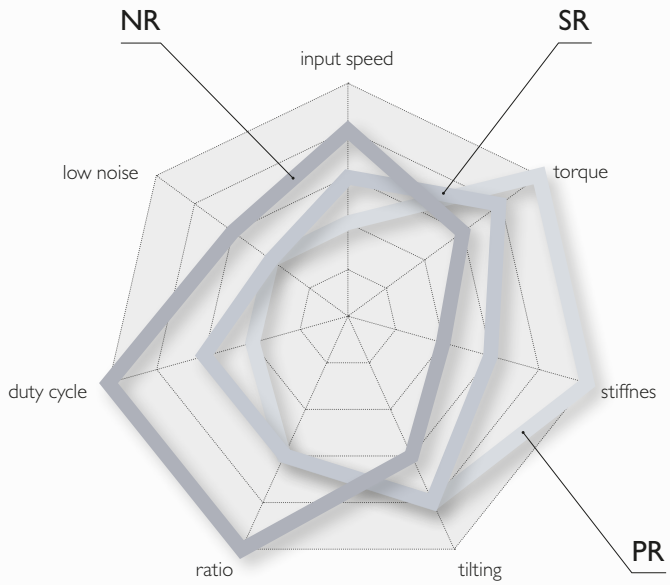

NR, SR and PR

NR type – For high flexibility

For use in most applications that require torque, precision and high speed operation in continuous SI and discontinuous S5 duty cycles.

SR type – For high torque

Without an increase in size, the SR range provides 33% more torque than the NR range and is used in discontinuous duty cycles of S5 and more.

PR type – For hyper torque

Without an increase in size, the PR range operates with 100% more torque than the NR and is used in discontinuous duty cycles of up to S5.

NGHP – An innovative system solution

Planetary gearbox with integrated eccentric output flange which provides precise gear mesh adjustment for the rack and pinion drive train.

The performance of a rack and pinion drive system is greatly influenced by how precisely the gear mesh between rack and pinion are set, as well as by the precision of the individual components. This gear mesh is typically set via the radial relationship of the pinion to the rack. To achieve low backlash, the pinion engages with the rack through a linear movement of the gearbox.

While seemingly easy in theory, this proves difficult in practice and can only be achieved with great effort, trained personnel, and suitable measurement equipment. Costly repetitive measurements and perhaps even specific equipment may be required for the customer's machine structure.

Güdel has now developed an innovative system, which in a very simple way, resolves the setting of the gear mesh between rack and pinion, while setting new standards when it comes to precision, performance, cost-effectiveness, and ease of maintenance.

At the heart of this innovative GAdjustment system is a low backlash planetary gearbox with an internal eccentric flange that rotates about the pinion. Once the gearbox is mounted into the machine structure by attaching the flange the pinion is engaged with the rack by rotating the gearbox housing. Fully supporting the radial mounting surface of the output flange provides maximum stiffness, resulting in longer gearbox bearing life. A benefit of this method of adjustment is that the ratio between rotation and pinion linear motion allows finer adjustment increments. This results in high precision and accuracy of the gear mesh between rack and pinion. This eccentric motion also enables the pinion to be completely disengaged from the rack when the planetary gearbox is rotated 180 degrees into the mounting position. In this way, the drive system can be quickly decoupled to allow manual movement for maintenance activity.

Key features of this system

- Maximum stiffness due to form fit support of the output bearing and the CP (compact pinion) solution
- Precise and repeatable adjustment process for setting gear mesh
- Compact functional unit with integral mounting and positioning system built into one component
- Assembly and disassembly with standard tools
- Set-up guidance through the easy-to-use web application GAdjuster
- Simple and cost-effective interface to the customer's machine structure
- Quick disengagement of the pinion from the rack for maintenance work
- Optimal force transmission into the customer-side machine structure

Compact package with high stiffness

The planetary gearbox NGHP is built on the proven technology of the Güdel NRHP Series planetary gearboxes. The addition of the unique adjustable flange mounting methodology provides both ease of adjustment and superior torsional stiffness and rigidity.

All-new interface

The all-new designed interface of the NGHP gearbox with the eccentric output flange guarantees optimal performance due to its form fit support. Furthermore, the new interface simplifies the customer structure and thus helps to reduce costs.

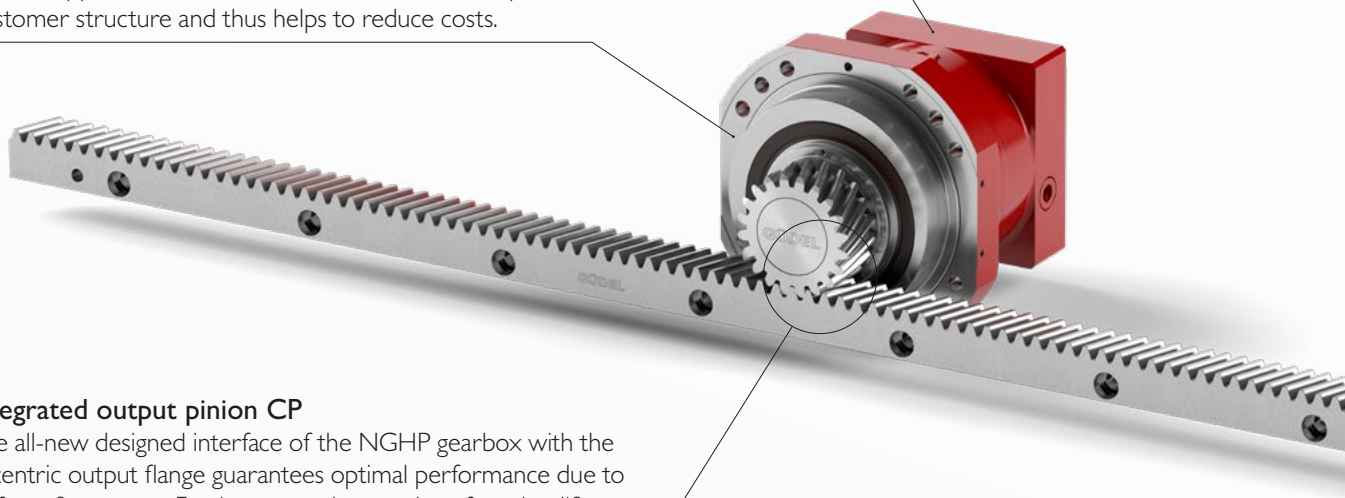

Integrated output pinion CP

The all-new designed interface of the NGHP gearbox with the eccentric output flange guarantees optimal performance due to its form fit support. Furthermore, the new interface simplifies the customer structure and thus helps to reduce costs.

GAdjuster web application

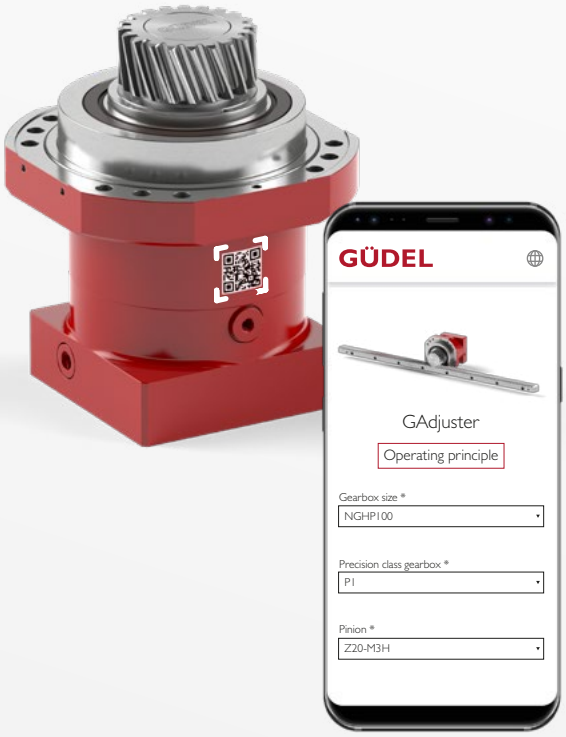

The GAdjuster supports you with a guided process for adjusting the gear mesh between rack and pinion. More then 20 years of experience in drive train technology allow us to give you a setting recommendation based on your configuration. Scan the QR code on the gearbox and set the recommended linear backlash by using step by step the easy-to-follow web application.

- Guided adjustment process
- Recommended linear backlash settings based on 20 years experience in drive train technology
- Detection of gearbox configuration
- Platform independent
- Quick link to the operating principle
- Related links to operating manual and catalog

Six types to cover a wide range of application requirements

Our six types, NRH, NRHP, NGHP, NR, SR, and PR provide you with a broad performance spectrum. Input speeds range up to 6000RPM, and output torques up to 5600 Nm.

The NRH, NRHP and NGHP types provide an excellent combination of performance characteristics: torque, speed, precision, low noise, and high duty cycle. The NRHP and NGHP are suitable when high stiffness and tilting rigidity is required.

The NR type offers flexibility and modularity, with the largest range of sizes, stages, and ratios.

The SR and PR ranges focus specifically on high torque or even hyper torque which needs to be performed in a limited space.

For each gearbox size, the three ranges of the NR, SR, and PR family have the same body. Minor variations at the output adapt the product to the higher torque capacity.

Torque

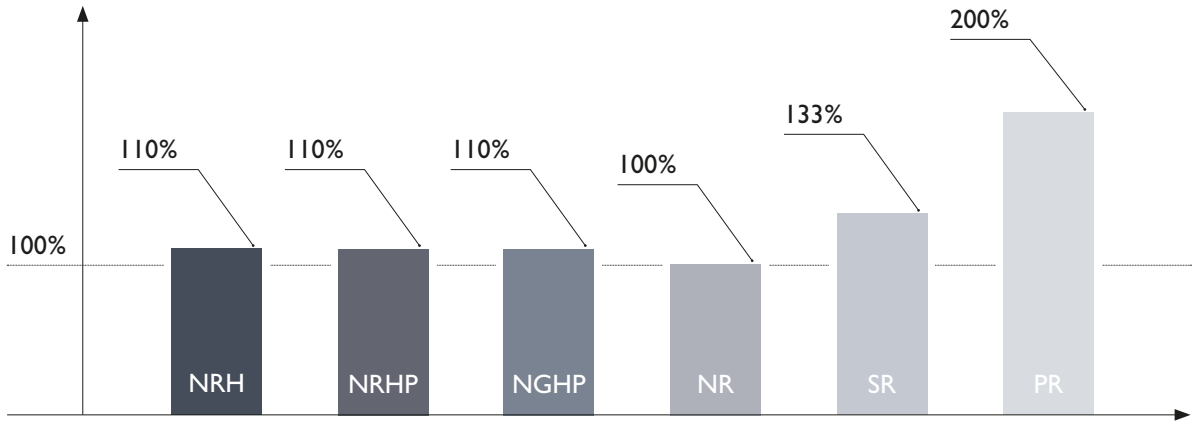

Duty cycle

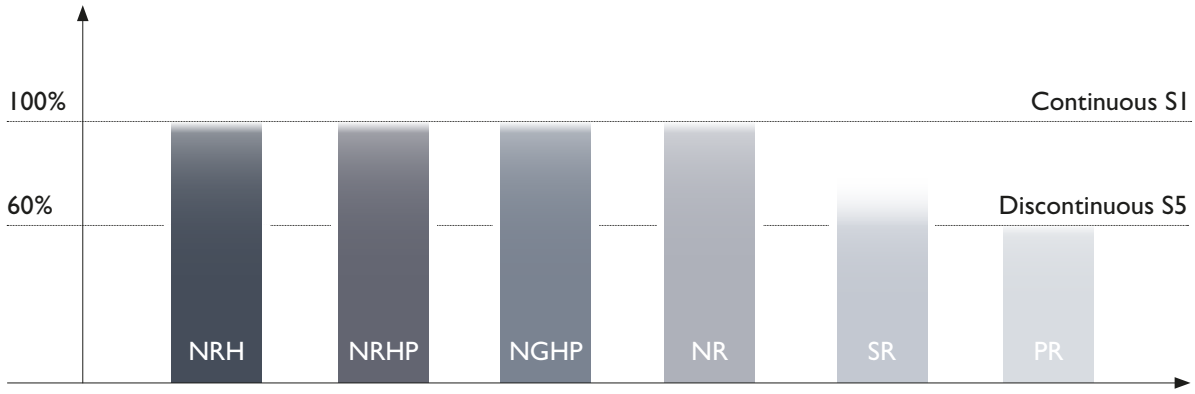

Noise

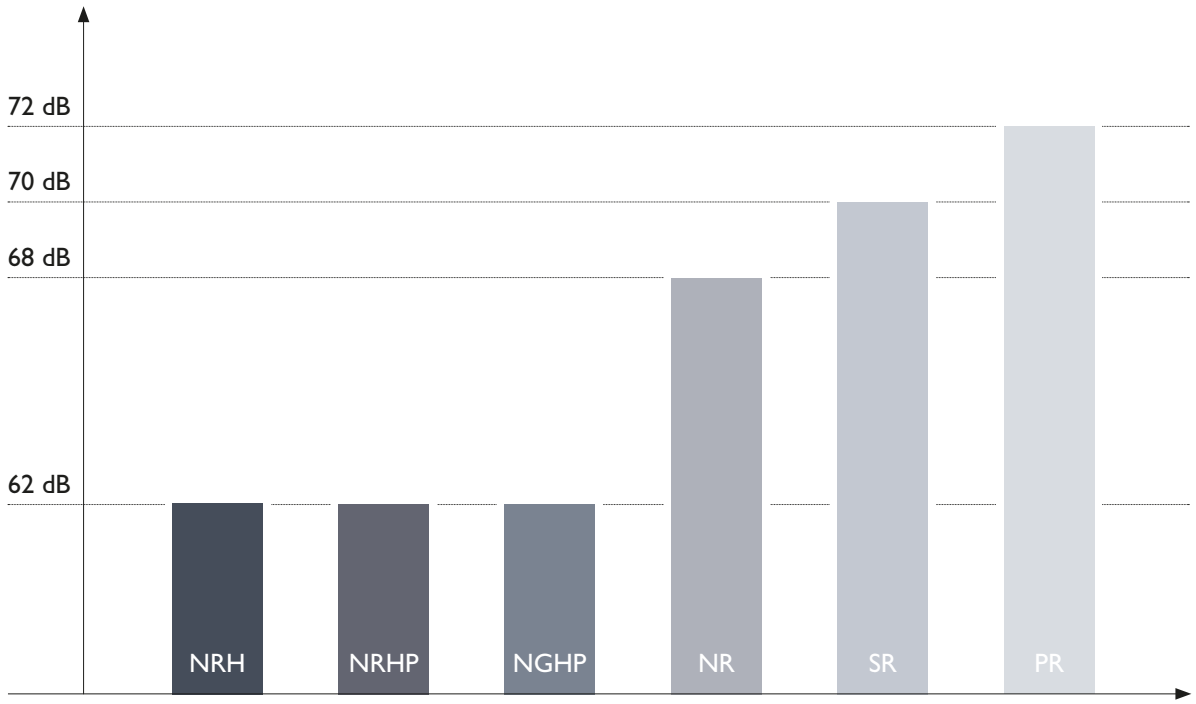

Tilting rigidity

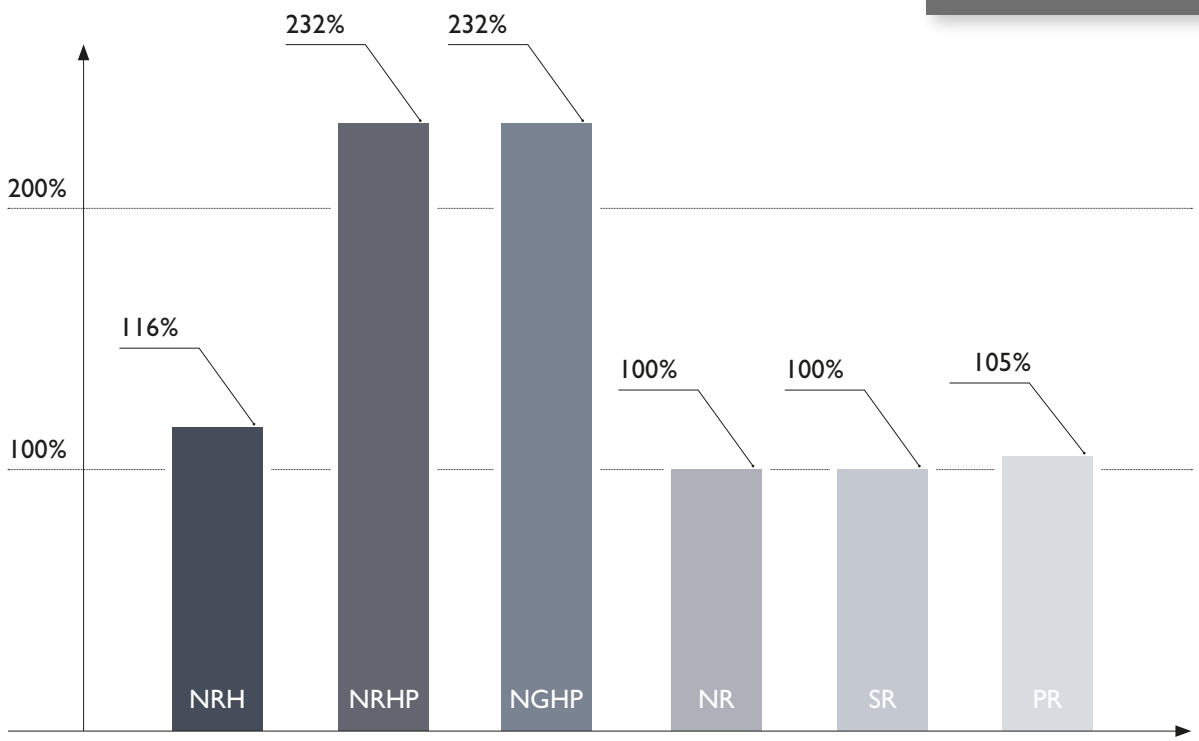

Make your decision – Range, speed & torque

Use the technical summaries to make your preselection from the five main gearbox types. Base your gearbox selection on the most important requirements for your particular application: torque, gearbox size, duty cycle, angular backlash, ratio, and speed.

Select NRH, NRHP and NGHP for high input speeds, or the NR type when modularity and a wide range of sizes, stages, and ratios is most important.

Choose the SR or PR type if your application requires high or hyper torque. The following graphs are based on a ratio of 12 in a discontinuous S5 duty cycle. Compare the maximum input speed n_{1max} and acceleration torque T_{2B} for the five types.

Types

		NRH	NRHP	NGHP	NR	SR	PR
Torque		110%	110 %	110 %	100 %	around 133 %	around 200 %
Duty cycle	S5	60%	60%	60%	60%	60%	60%
	S1	100 %	100%	100%	100%	–	–
Angular backlash	Precision	P 1, P 3, P 5	P 1, P 3, P 5	P 1, P 3, P 5	P 1, P 3, P 5, P 12	P 1, P 3, P 5, P 12	P 1, P 3, P 5, P 12
	arcmin	≤ 1, ≤ 3, ≤ 5	≤ 1, ≤ 3, ≤ 5	≤ 1, ≤ 3, ≤ 5	≤ 1, ≤ 3, ≤ 5, ≤ 12	≤ 1, ≤ 3, ≤ 5, ≤ 12	≤ 1, ≤ 3, ≤ 5, ≤ 12
Ratio *	1-stage	3, 4, 5, 7, 10	3, 4, 5, 7, 10	3, 4, 5, 7, 10	3, 4, 5, 7, 10	4	3
	2-stage	12, 16, 20, 25, 30, 35, 40, 50, 70, 100	12, 16, 20, 25, 30, 35, 40, 50, 70, 100	12, 16, 20, 25, 30, 35, 40, 50, 70, 100	12, 16, 20, 25, 30, 35, 40, 50, 70, 100	12, 16, 20, 28, 40	9, 12, 15, 21, 30
	3-stage	–	–	–	36, 45, 60, 75, 90, 105, 120, 150, 210, 300	60, 80, 100, 112, 120, 140, 160, 200, 280, 400	36, 45, 60, 75, 90, 105, 120, 150, 210, 300

* Other ratios are available on request.

Input speed

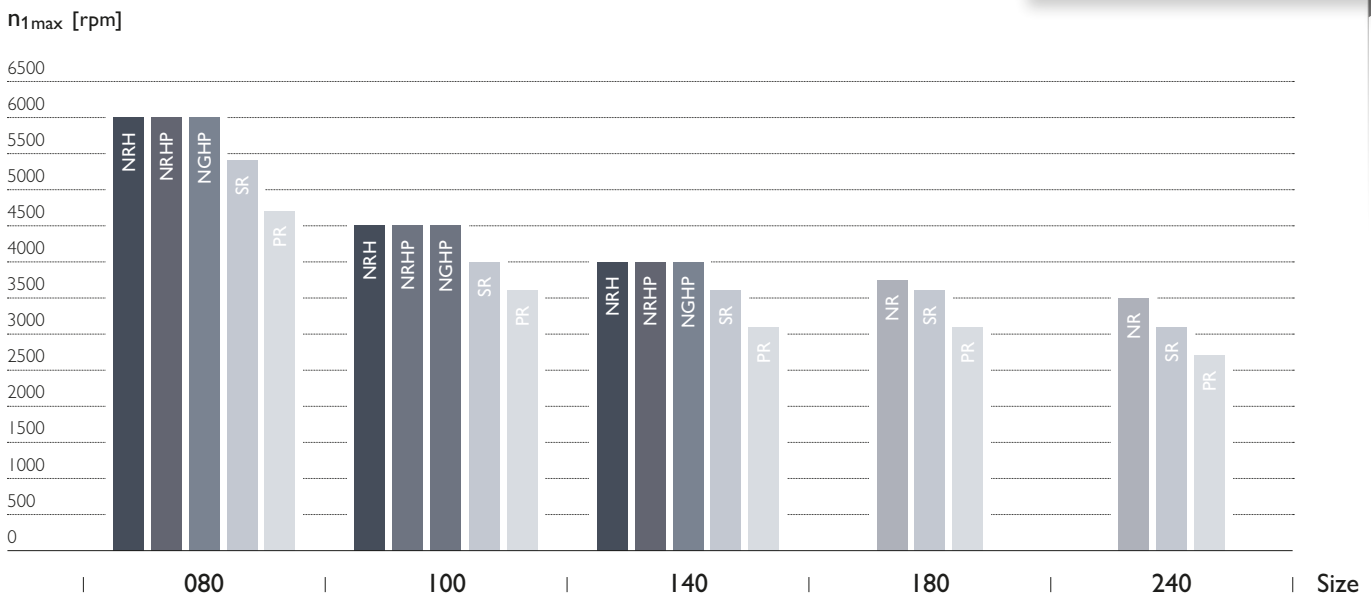

Output torque

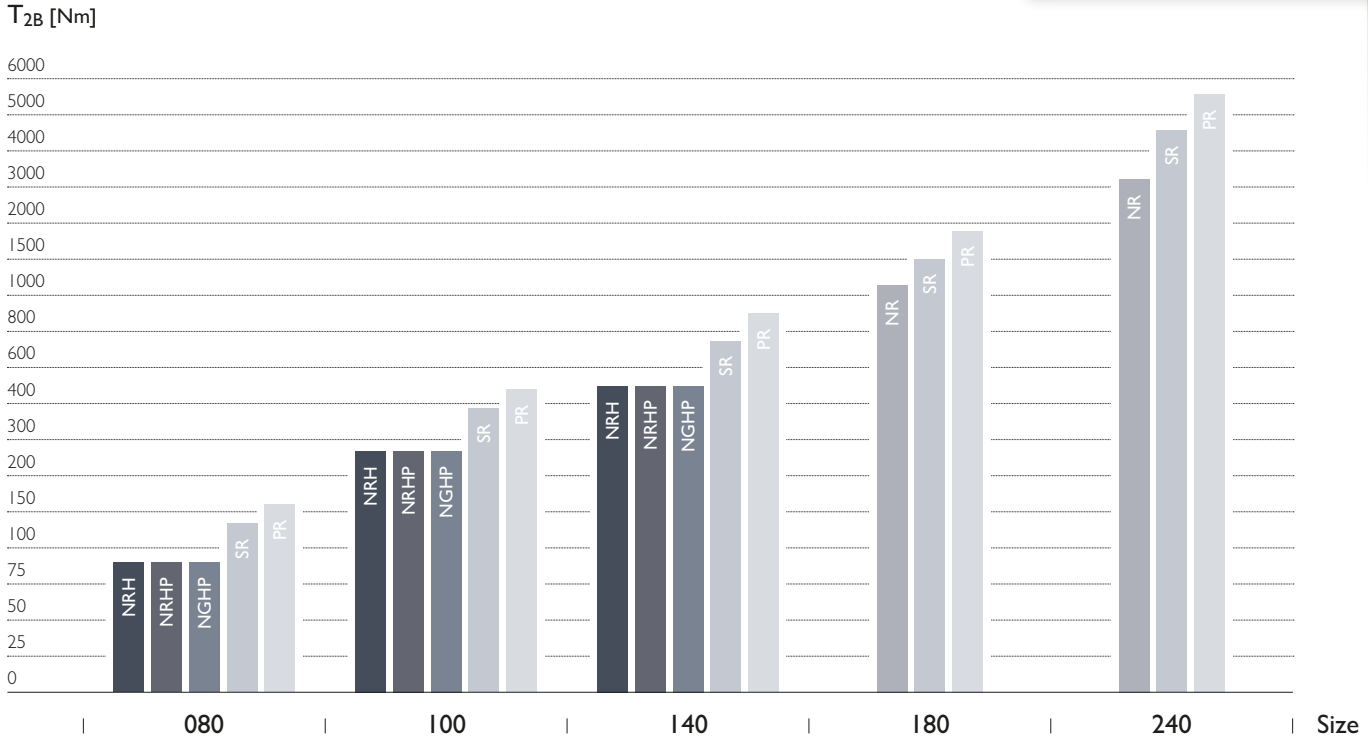

Great adaptability – Standard & optional inputs

Due to our modular system, all common servo motors can be easily mounted on our planetary gearboxes. Optional inputs such as primary shaft can be provided on request.

We have a standard flange solution for the most commonly used servo motors. Depending on the range of the gearbox, we offer a total of three standard input versions. Your selection of an input will depend on the geometric dimensions of the motor.

Standard inputs

A

Small motor

B

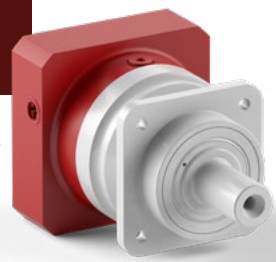

Medium motor

C

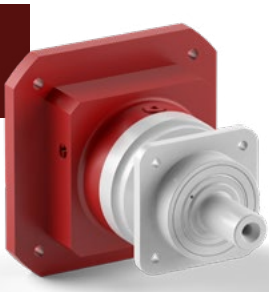

Long motor

Standard inputs

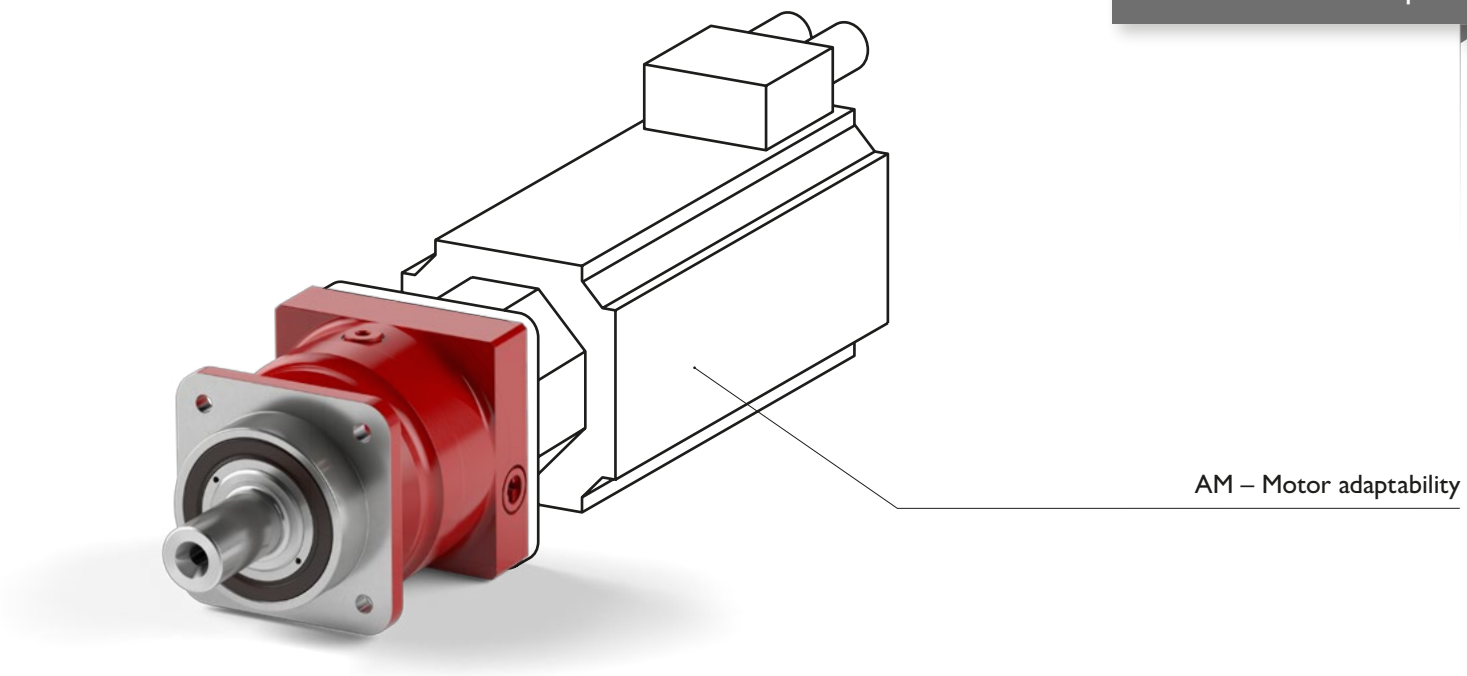

Optional inputs

For special applications, in which the motor cannot be directly mounted on the gearbox, it is possible to fit the gearbox with an optional input shaft.

Example AL

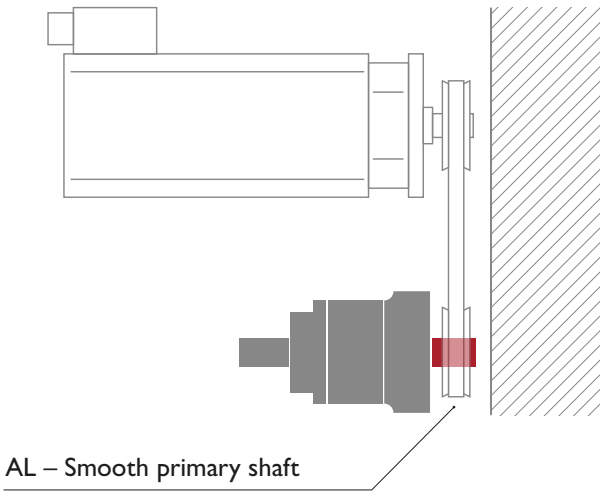

Example AC

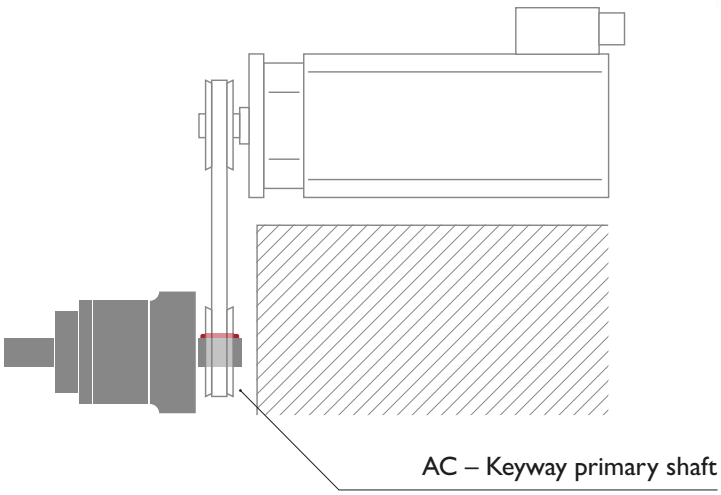

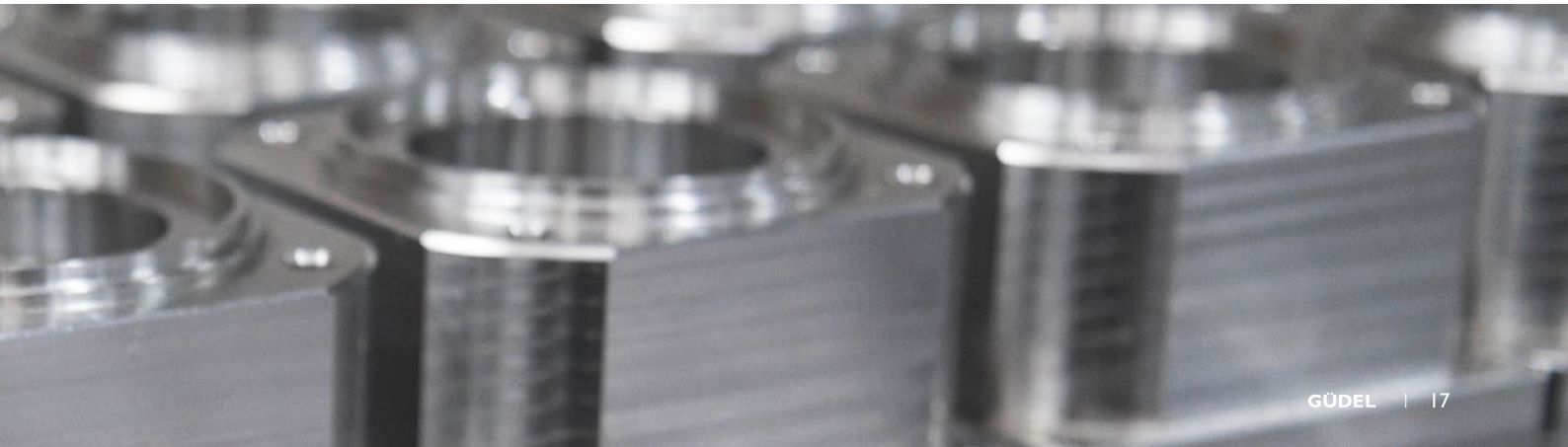

Unlimited flexibility – Standard and optional outputs

To meet your requirements, our planetary gearboxes offers six output options to cover the broadest possible range of applications.

Three standard outputs are available in stock, with three additional outputs available upon request. Please don't hesitate to contact us if your application requires a configuration not shown here.

Standard outputs

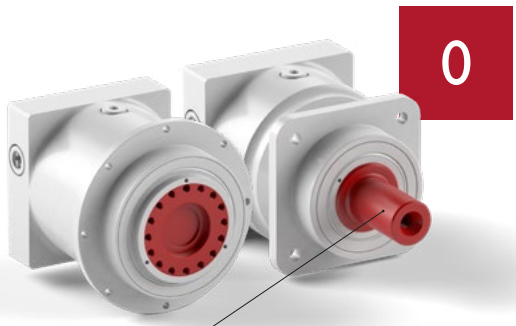

Smooth output shaft and flange
The reference standard output with dimensions according to market standards.

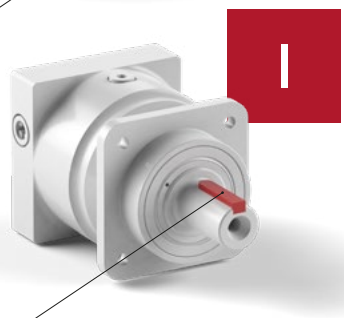

Keyway output shaft
A keyway according to DIN 6885 can be added to the smooth shaft.

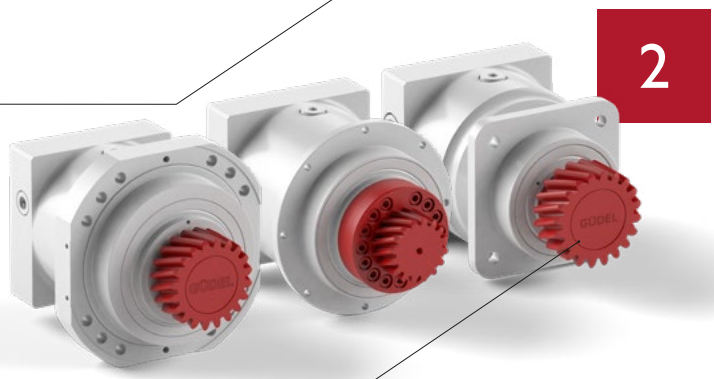

Integrated output pinion
The integrated output pinion is a unique solution – combining rack, pinion and gearbox. This function package creates an ideal drive train.

Optional outputs

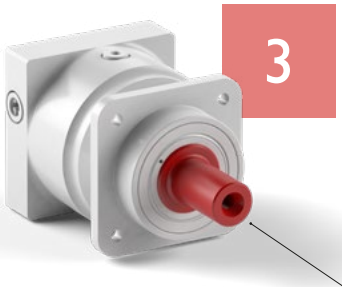

Customized output shaft

Please contact us, if the standard output shafts do not meet your specification.

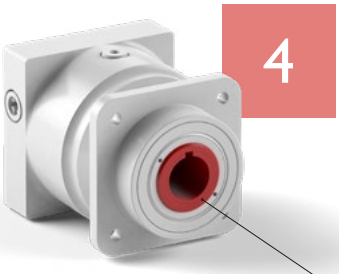

Hollow keyway output

On request we can provide you with a hollow keyway output. Please find the details on the technical information pages.

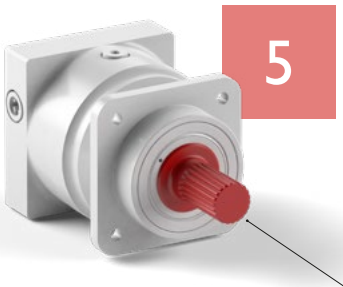

Splined output shaft

Splined output shafts are available on request. Please specify dimensions as well as type of spline (standard) and tolerances required.

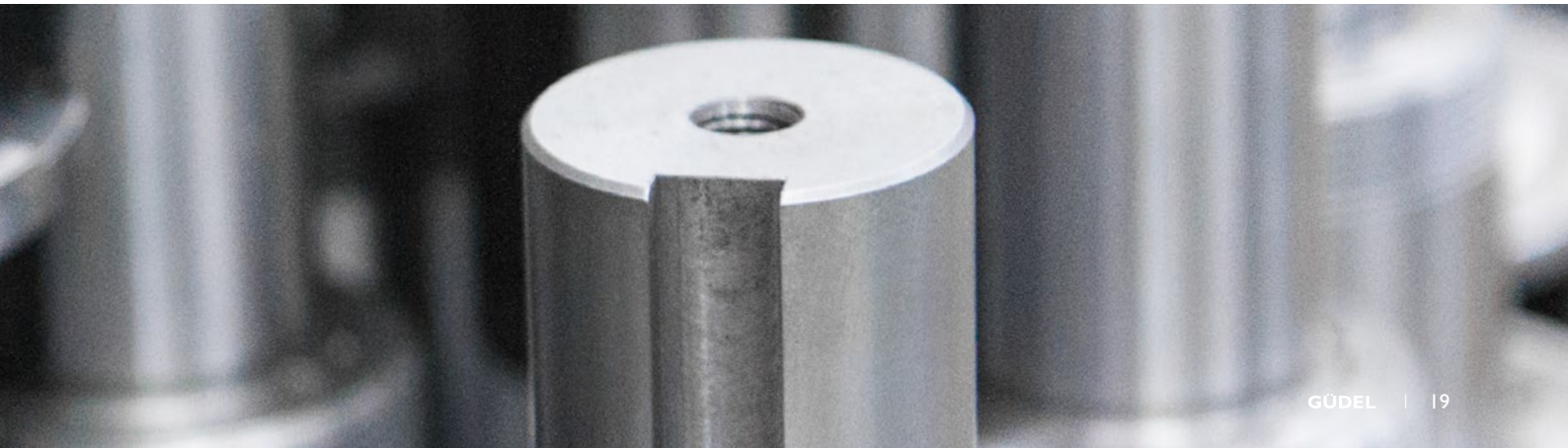

Reliability – Regardless of the mounting position

Our high-performance planetary gearboxes can be used in any mounting orientation. Whether your application requires a horizontal output (HI), vertical with upright facing output (VI), or vertical with downward-facing output (V2) – the universal TP configuration covers any orientation.

For specific applications, including continuous operation SI together with high input speed, we recommend the use of an additional air-vent plug (breather). This air-vent plug can be installed at any time – even as a retrofit on installed gearboxes.

In order to optimize gearbox performance, we recommend specifying the actual mounting position VI, V2 or HI, especially for ratios requiring a 3-stage gearbox.

Mounting positions

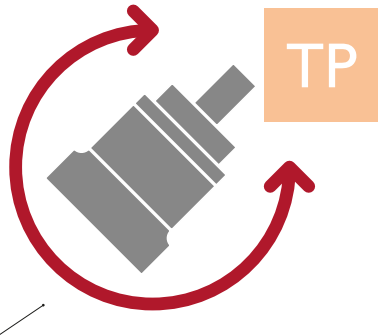

All positions

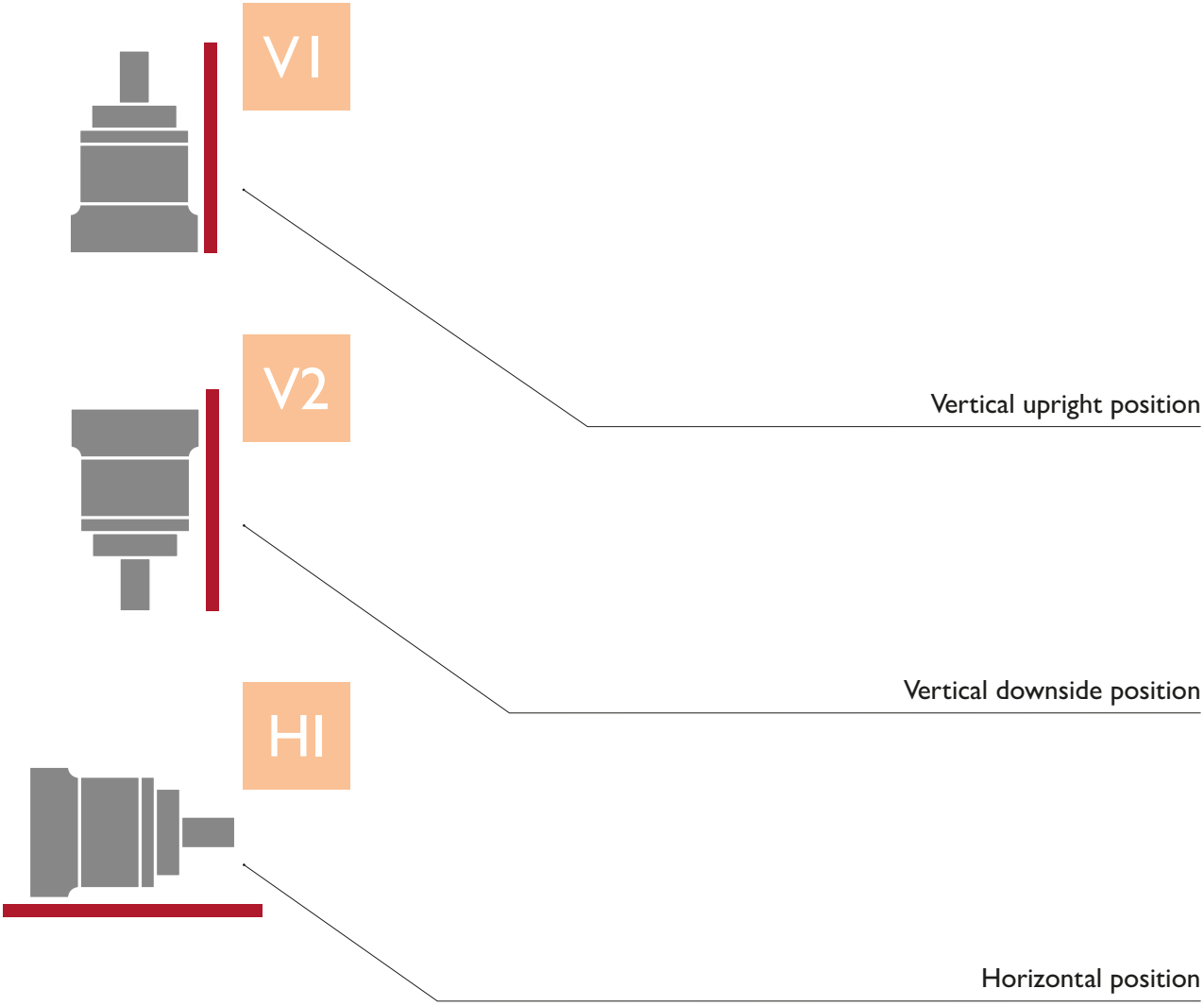
V1
V2
H1
Vertical upright position
Vertical downside position
Horizontal position

Your ideal drive train – Gearbox, rack & pinion

Güdel planetary gearboxes with an integrated output pinion, together with a Güdel rack, create a functional package that can be easily integrated into your application as an ideal drive train: compact, high performance, robust and efficient.

All the aforementioned components are designed and manufactured by Güdel, so we guarantee a perfect configuration and high performance for the entire drive train.

The ideal drive train is designed for applications requiring speed, high dynamics, precision and long travel lengths. Examples include all manner of cutting processes (plasma, laser, flame, waterjet, glass, or textile), small and medium-sized machine tools, wood processing machines, robotics, and other handling devices.

For applications in the food, pharmaceutical or clean-room sectors, we can supply a wide range of components with special coatings, stainless steel finishes, or specialized lubricants. If you can't find the product you're looking for in this catalog, please don't hesitate to contact us directly.

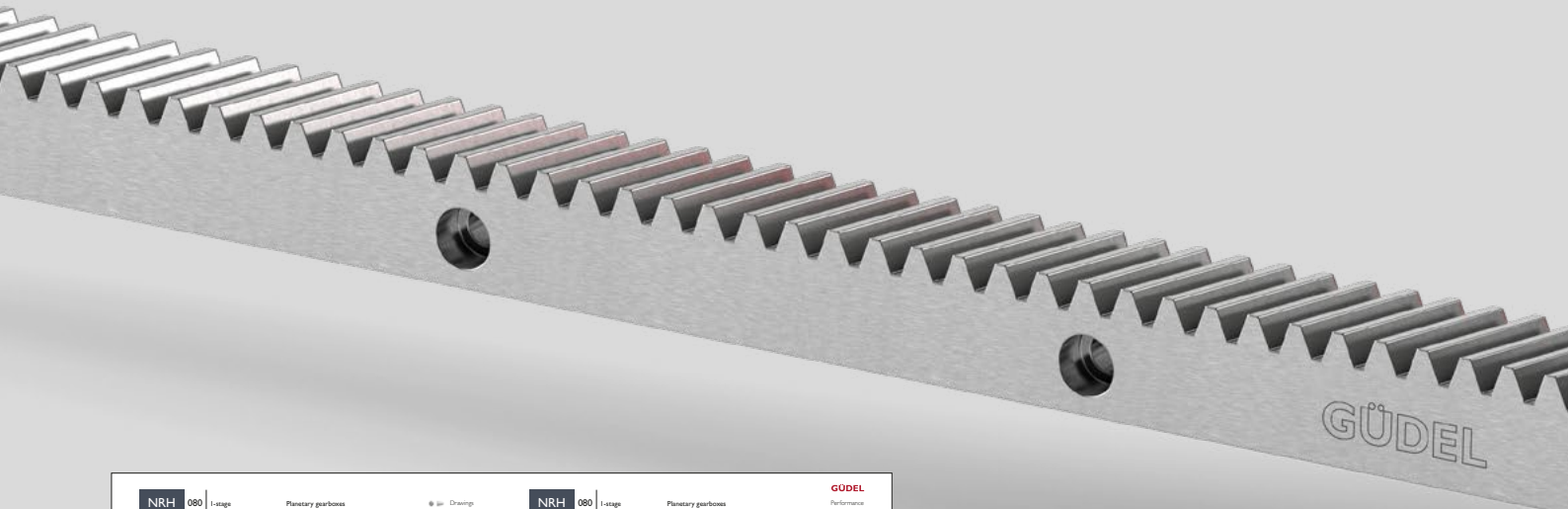

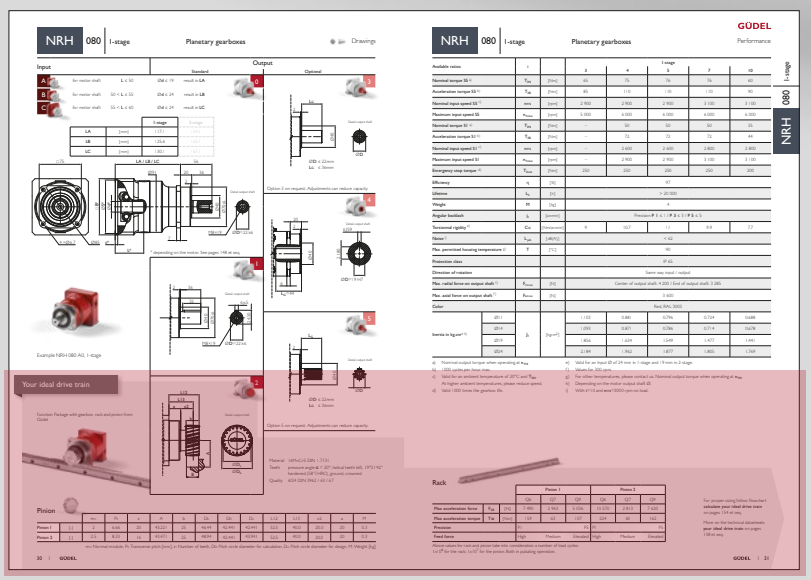

Detailed information on the **technical data sheets** on pages 30 et seq.

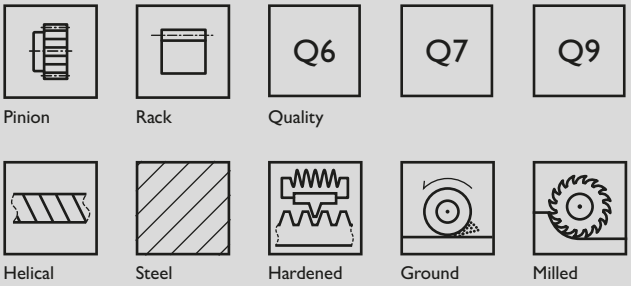

	High-end applications		Standard applications		Basic applications	
Rack	Q6		Q7		Q9	
Gearbox	P1	P3	P3	P5	P5	P12
Precision	High					Standard
Feed force	High		Medium			Elevated

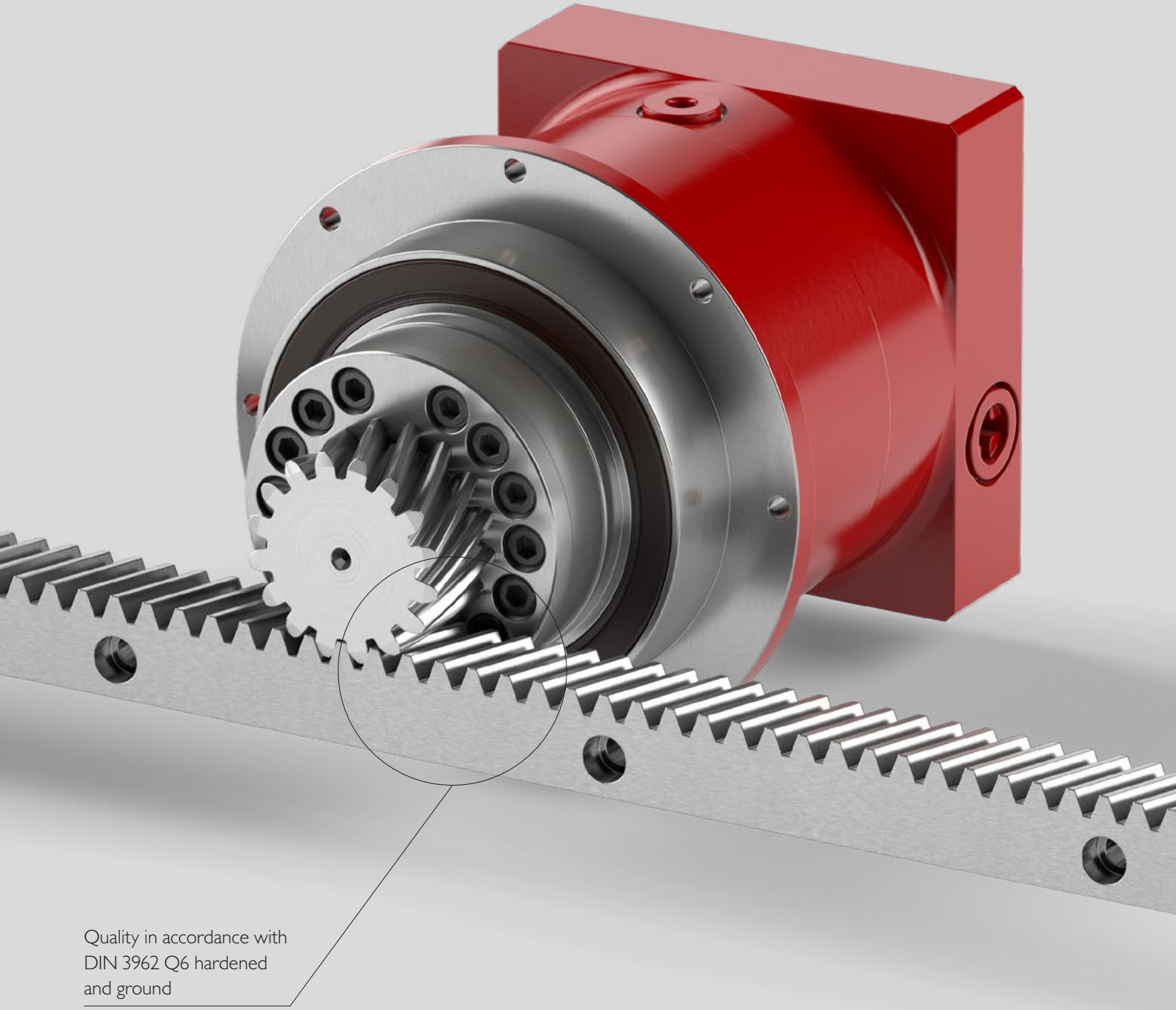

Quality in accordance with DIN 3962 Q6 hardened and ground

Find your right size – Performance & configuration

	High performance			High stiffness			Smart adjustment		
	NRH			NRHP			NGHP		
Size	T_{2B} [Nm]	Stage	Page	T_{2B} [Nm]	Stage	Page	T_{2B} [Nm]	Stage	Page
080	≤110	1	30–31	≤ 110	1	42–43	≤ 110	1	54–55
		2	32–33		2	44–45		2	56–57
100	≤ 350	1	34–35	≤ 350	1	46–47	≤ 350	1	58–59
		2	36–37		2	48–49		2	60–61
140	≤ 650	1	38–39	≤ 650	1	50–51	≤ 650	1	62–63
		2	40–41		2	52–53		2	64–65
180	–			–			–		
240	–			–			–		

High modularity

NR		
T_{2B} [Nm]	Stage	Page
–		
–		
–		
≤ 1150	1	66–67
	2	68–69
	3	70–71
≤ 3800	1	72–73
	2	74–75
	3	76–77

High torque

SR		
T_{2B} [Nm]	Stage	Page
≤ 150	1	78–79
	2	
	3	80–81
≤ 404	1	82–83
	2	
	3	84–85
≤ 750	1	86–87
	2	
	3	88–89
≤ 1500	1	90–91
	2	
	3	92–93
≤ 4800	1	94–95
	2	
	3	96–97

Hyper torque

PR			
T_{2B} [Nm]	Stage	Page	Size
≤ 160	1	98–99	**080**
	2		
	3	100–101	
≤ 556	1	102–103	**100**
	2		
	3	104–105	
≤ 900	1	106–107	**140**
	2		
	3	108–109	
≤ 1925	1	110–111	**180**
	2		
	3	112–113	
≤ 5600	1	114–115	**240**
	2		
	3	116–117	

Find your right configuration – Available inputs and outputs

Standard inputs

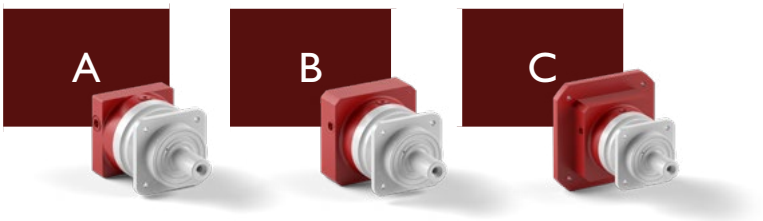

Size	Type	Small	Medium	Long
080	NRH	•	•	•
	NRHP	•	•	•
	NGHP	•	•	•
	SR	•	•	*
	PR	•	•	*
100	NRH	•	•	•
	NRHP	•	•	•
	NGHP	•	•	•
	SR	•	•	*
	PR	•	•	*
140	NRH	•	•	•
	NRHP	•	•	•
	NGHP	•	•	•
	SR	•	•	•
	PR	•	•	•
180	NR	•	•	•
	SR	•	•	•
	PR	•	•	•
240	NR	•	•	*
	SR	•	•	*
	PR	•	•	*

• Available / * We provide additional flanges for bigger motors on request.

Standard outputs

Optional outputs

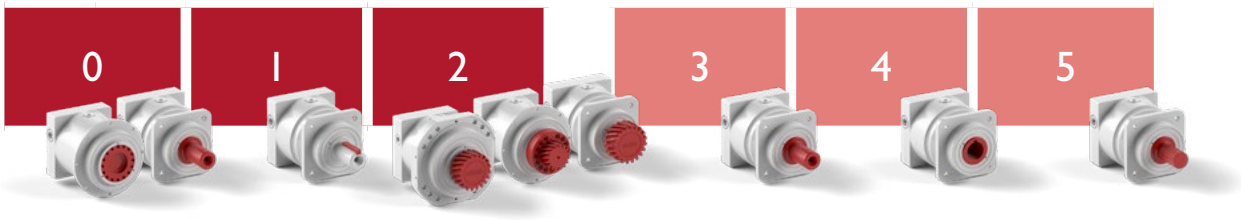

Flange	Smooth	Keyway	Pinion	Custom	Hollow	Splined	Type	Size
–	•	•	•	•	•	•	NRH	080
•	–	–	•	–	–	–	NRHP	
–	–	–	•	–	–	–	NGHP	
–	•	•	•	•	•	•	SR	
–	•	•	•	•	•	•	PR	
–	•	•	•	•	•	•	NRH	100
•	–	–	•	–	–	–	NRHP	
•	–	–	•	–	–	–	NGHP	
–	•	•	•	•	•	•	SR	
–	•	•	•	•	•	•	PR	
–	•	•	•	•	•	•	NRH	140
•	–	–	•	–	–	–	NRHP	
•	–	–	•	–	–	–	NGHP	
–	•	•	•	•	•	•	SR	
–	•	•	•	•	•	•	PR	
–	•	•	•	•	•	•	NR	180
–	•	•	•	•	•	•	SR	
–	•	•	•	•	•	•	PR	
–	•	•	•	•	•	•	NR	240
–	•	•	•	•	•	•	SR	
–	•	•	•	•	•	•	PR	

• Available / * We provide additional flanges for bigger motors on request.

GÜDEL
GÜDEL
TECH

Technical data sheets

GÜDEL

Input

A	for motor shaft	L ≤ 50	Ød ≤ 19	result in **LA**
B	for motor shaft	50 < L ≤ 55	Ød ≤ 24	result in **LB**
C	for motor shaft	55 < L ≤ 60	Ød ≤ 24	result in **LC**

		1-stage	2-stage
LA	[mm]	117.1	154.1
LB	[mm]	125.6	162.1
LC	[mm]	130.1	167.1

Output

Standard

0

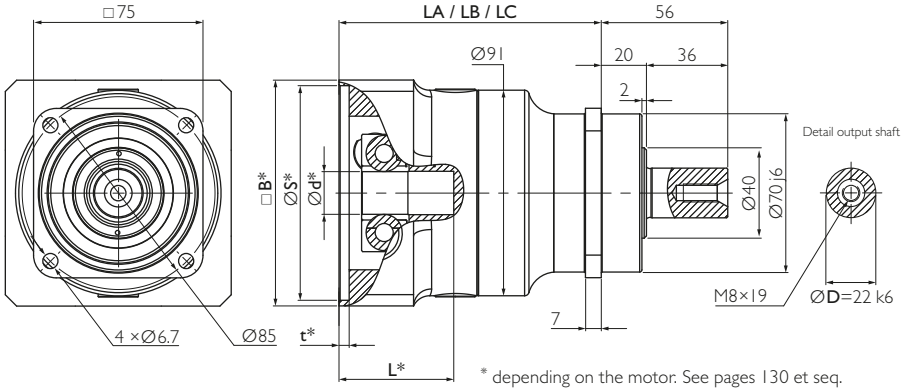

* depending on the motor. See pages 130 et seq.

1

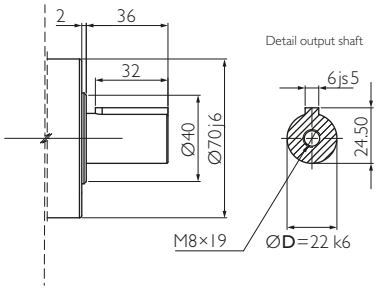

2

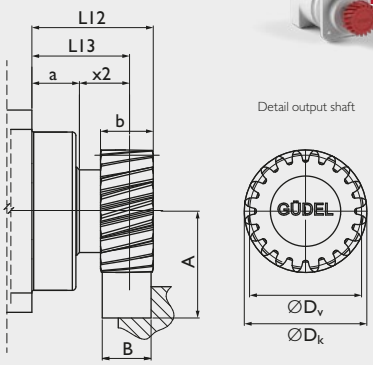

Optional

3

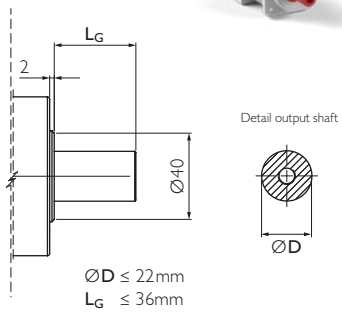

Option 3 on request. Adjustments can reduce capacity.

4

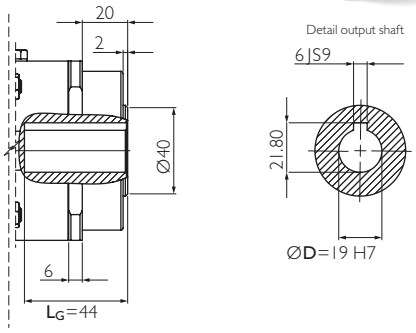

5

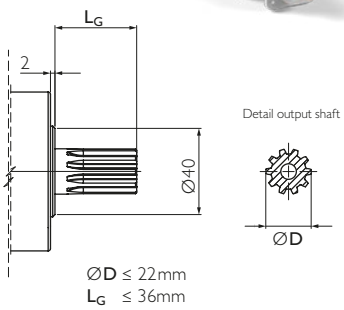

Option 5 on request. Adjustments can reduce capacity.

Example NRH 080 A0, 1-stage

Your ideal drive train

Function Package with gearbox, rack and pinion from Güdel

Material	16MnCr5 DIN 1.7131
Teeth	pressure angle α = 20°, helical teeth left, 19°31'42" hardened (58$^{+4}_{0}$ HRC), ground, crowned
Quality	6f24 DIN 3962 / 63 / 67

Pinion

		m_n	P_t	z	A	b	D_k	D_0	D_v	L12	L13	x2	a	M
Pinion 1	[-]	2	6.66	20	43.221	25	46.44	42.441	42.441	52.5	40.0	20.0	20	0.3
Pinion 2	[-]	2.5	8.33	16	43.471	25	48.94	42.441	43.941	52.5	40.0	20.0	20	0.3

m_n: Normal module, P_t: Transverse pitch [mm], z: Number of teeth, D_0: Pitch circle diameter for calculation, D_v: Pitch circle diameter for design, M: Weight [kg]

Available ratios		i		1-stage 3	4	5	7	10
Nominal torque S5 a)		T_{2N}	[Nm]	65	75	76	76	60
Acceleration torque S5 b)		T_{2B}	[Nm]	85	110	110	110	90
Nominal input speed S5 c)		n_{1N}	[rpm]	2 900	2 900	2 900	3 100	3 100
Maximum input speed S5		n_{1max}	[rpm]	5 000	6 000	6 000	6 000	6 000
Nominal torque S1 a)		T_{2N}	[Nm]	–	50	50	50	35
Acceleration torque S1 b)		T_{2B}	[Nm]	–	72	72	72	44
Nominal input speed S1 c)		n_{1N}	[rpm]	–	2 600	2 600	2 800	2 800
Maximum input speed S1		n_{1max}	[rpm]	–	2 900	2 900	3 100	3 100
Emergency stop torque d)		T_{2not}	[Nm]	250	250	250	250	200
Efficiency		η	[%]	97				
Lifetime		L_h	[h]	> 20 000				
Weight		M	[kg]	4				
Angular backlash		j_t	[arcmin]	Precision **P 1** ≤ 1 / **P 3** ≤ 3 / **P 5** ≤ 5				
Torsionnal rigidity e)		C_{t2}	[Nm/arcmin]	9	10.7	11	9.9	7.7
Noise i)		L_{pA}	[dB(A)]	< 62				
Max. permitted housing temperature g)		T	[°C]	90				
Protection class				IP 65				
Direction of rotation				Same way input / output				
Max. radial force on output shaft f)		F_{rmax}	[N]	Center of output shaft: 4 200 / End of output shaft: 3 285				
Max. axial force on output shaft f)		F_{amax}	[N]	3 600				
Color				Red, RAL 3003				
Inertia in kg.cm² h)	Ø11	J_1	[kgcm²]	1.103	0.881	0.796	0.724	0.688
	Ø14			1.093	0.871	0.786	0.714	0.678
	Ø19			1.856	1.634	1.549	1.477	1.441
	Ø24			2.184	1.962	1.877	1.805	1.769

a) Nominal output torque when operating at n_{1N}.
b) 1000 cycles per hour max.
c) Valid for an ambient temperature of 20°C and T_{2N}. At higher ambient temperatures, please reduce speed.
d) Valid 1000 times the gearbox life.
e) Valid for an Input Ø of 19 mm in 1-stage and 14 mm in 2-stage.
f) Values for 300 rpm.
g) For other temperatures, please contact us. Nominal output torque when operating at n_{1N}.
h) Depending on the motor output shaft Ø.
i) With **i**=10 and n_{1N}=3000 rpm no load.

Rack

			Pinion 1 Q6	Q7	Q9	Pinion 2 Q6	Q7	Q9
Max acceleration force	F_{2B}	[N]	7 490	2 963	5 036	10 570	2 813	7 620
Max acceleration torque	T_{2B}	[Nm]	159	63	107	224	60	162
Precision			P1		P5	P1		P5
Feed force			High	Medium	Elevated	High	Medium	Elevated

Above values for rack and pinion take into consideration a number of load cycles: 1×10^6 for the rack; 1×10^7 for the pinion. Both in pulsating operation.

For proper sizing follow flowchart **calculate your ideal drive train** on pages 136 et seq.

More on the technical datasheets **your ideal drive train** on pages 120 et seq.

Input

A	for motor shaft	L ≤ 50	Ød ≤ 19	result in **LA**
B	for motor shaft	50 < L ≤ 55	Ød ≤ 24	result in **LB**
C	for motor shaft	55 < L ≤ 60	Ød ≤ 24	result in **LC**

		1-stage	2-stage
LA	[mm]	117.1	154.1
LB	[mm]	125.6	162.1
LC	[mm]	130.1	167.1

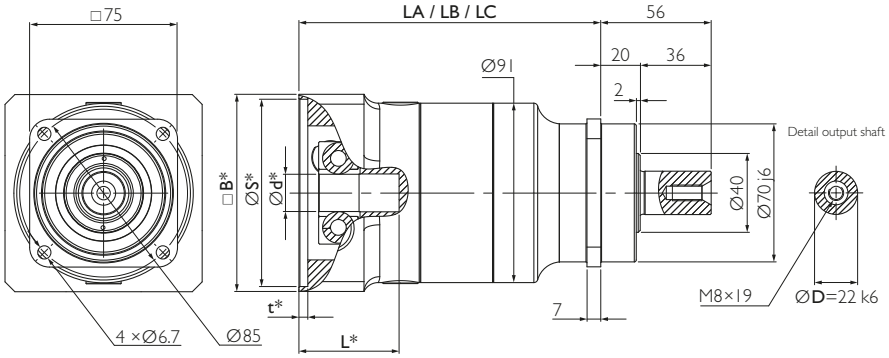

* depending on the motor. See pages 130 et seq.

Example NRH 080 A0, 2-stage

Output

Standard

0

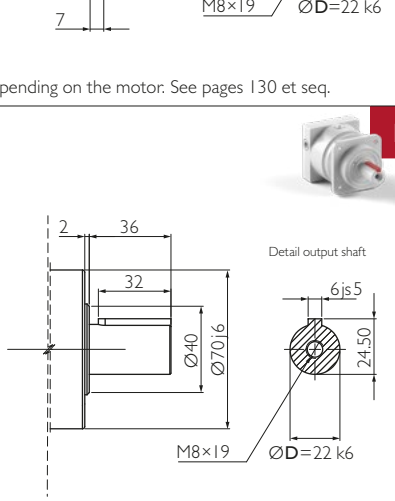

1

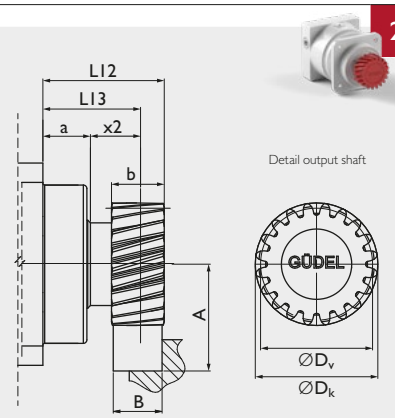

2

Optional

3

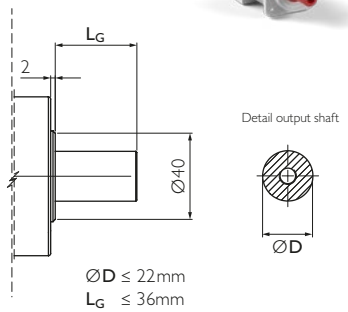

Option 3 on request. Adjustments can reduce capacity.

4

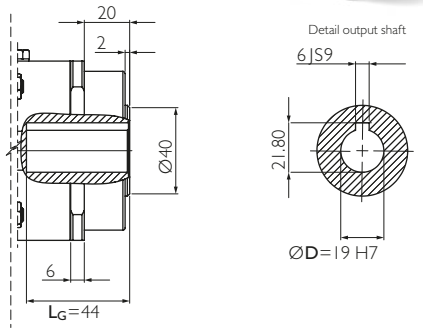

5

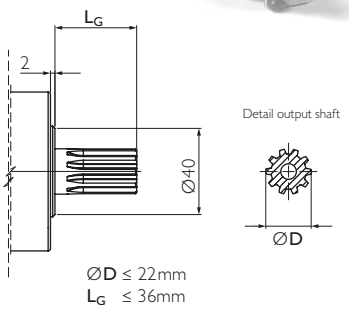

Option 5 on request. Adjustments can reduce capacity.

Your ideal drive train

Function Package with gearbox, rack and pinion from Güdel

Material	16MnCr5 DIN 1.7131
Teeth	pressure angle α = 20°, helical teeth left, 19°31'42" hardened (58$^{+4}_{0}$ HRC), ground, crowned
Quality	6f24 DIN 3962 / 63 / 67

Pinion

		m_n	P_t	z	A	b	D_k	D_0	D_v	L12	L13	x2	a	M
Pinion 1	[-]	2	6.66	20	43.221	25	46.44	42.441	42.441	52.5	40.0	20.0	20	0.3
Pinion 2	[-]	2.5	8.33	16	43.471	25	48.94	42.441	43.941	52.5	40.0	20.0	20	0.3

m_n: Normal module, P_t: Transverse pitch [mm], z: Number of teeth, D_0: Pitch circle diameter for calculation, D_v: Pitch circle diameter for design, M: Weight [kg]

Available ratios *		i		2-stage									
				12	16	20	25	30	35	40	50	70	100
Nominal torque S5 a)		T_{2N}	[Nm]	75	90	90	90	75	90	90	90	90	60
Acceleration torque S5 b)		T_{2B}	[Nm]	85	110	110	110	90	110	110	110	110	90
Nominal input speed S5 c)		n_{1N}	[rpm]	3 300	3 500	3 500	3 500	3 500	3 500	3 500	3 800	4 500	4 500
Maximum input speed S5		n_{1max}	[rpm]	6 000	6 000	6 000	6 000	6 000	6 000	6 000	6 000	6 000	6 000
Nominal torque S1 a)		T_{2N}	[Nm]	50	50	50	50	40	50	50	50	50	35
Acceleration torque S1 b)		T_{2B}	[Nm]	72	72	72	72	72	72	72	72	72	47
Nominal input speed S1 c)		n_{1N}	[rpm]	2 300	3 100	3 100	3 100	3 100	3 100	3 100	3 400	4 000	4 000
Maximum input speed S1		n_{1max}	[rpm]	3 300	3 300	3 500	3 500	3 500	3 500	3 500	3 800	4 500	4 500
Emergency stop torque d)		T_{2not}	[Nm]	250	250	250	250	250	250	250	250	250	200
Efficiency		η	[%]	94									
Lifetime		L_h	[h]	> 20 000									
Weight		M	[kg]	5.5									
Angular backlash		j_t	[arcmin]	Precision **P 1** ≤ 1 / **P 3** ≤ 3 / **P 5** ≤ 5									
Torsionnal rigidity e)		C_{t2}	[Nm/arcmin]	8.7	10.7	10.7	10.6	8.7	10.6	10	9.9	9.3	7.3
Noise i)		L_{pA}	[dB(A)]	< 62									
Max. permitted housing temperature g)		T	[°C]	90									
Protection class				IP 65									
Direction of rotation				Same way input / output									
Max. radial force on output shaft f)		F_{rmax}	[N]	Center of output shaft: 4 200 / End of output shaft: 3 285									
Max. axial force on output shaft f)		F_{amax}	[N]	3 600									
Color				Red, RAL 3003									
Inertia in kg.cm² h)	Ø11	J_1	[kgcm²]	0.864	0.851	0.845	0.773	0.685	0.713	0.683	0.682	0.682	0.681
	Ø14			0.854	0.841	0.835	0.763	0.675	0.703	0.673	0.672	0.672	0.671
	Ø19			1.617	1.604	1.598	1.526	1.438	1.466	1.436	1.435	1.435	1.434
	Ø24			1.945	1.932	1.926	1.854	1.766	1.794	1.764	1.763	1.763	1.762

* Other ratios available. 9, 15, 21, 27, 28, 49 on request.
a) Nominal output torque when operating at n_{1N}.
b) 1000 cycles per hour max.
c) Valid for an ambient temperature of 20°C and T_{2N}.
At higher ambient temperatures, please reduce speed.
d) Valid 1000 times the gearbox life.
e) Valid for an Input Ø of 19 mm in 1-stage and 14 mm in 2-stage.
f) Values for 300 rpm.
g) For other temperatures, please contact us. Nominal output torque when operating at n_{1N}.
h) Depending on the motor output shaft Ø.
i) With **i**=10 and n_{1N}=3000 rpm no load.

Rack

			Pinion 1			Pinion 2		
			Q6	Q7	Q9	Q6	Q7	Q9
Max acceleration force	F_{2B}	[N]	7 490	2 963	5 036	10 570	2 813	7620
Max acceleration torque	T_{2B}	[Nm]	159	63	107	224	60	162
Precision			P1		P5	P1		P5
Feed force			High	Medium	Elevated	High	Medium	Elevated

Above values for rack and pinion take into consideration a number of load cycles:
1×10^6 for the rack; 1×10^7 for the pinion. Both in pulsating operation.

For proper sizing follow flowchart **calculate your ideal drive train** on pages 136 et seq.

More on the technical datasheets **your ideal drive train** on pages 120 et seq.

Input

A	for motor shaft	L ≤ 54	Ød ≤ 24	result in **LA**
B	for motor shaft	54 < L ≤ 65	Ød ≤ 38	result in **LB**
C	for motor shaft	65 < L ≤ 80	Ød ≤ 38	result in **LC**

		1-stage	2-stage
LA	[mm]	130	181
LB	[mm]	141	192
LC	[mm]	161	212

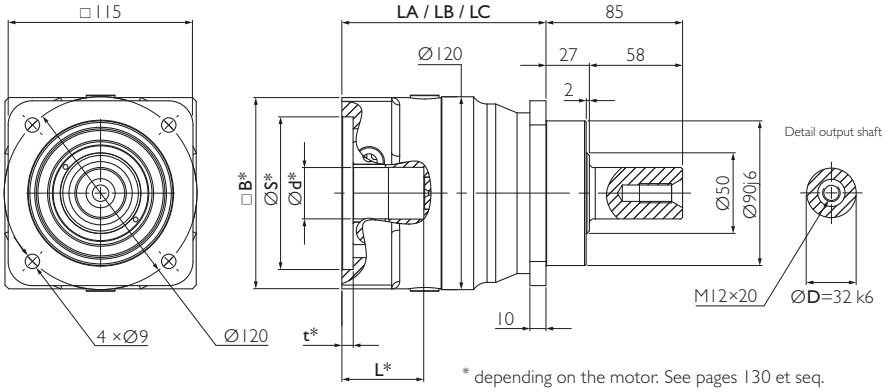

* depending on the motor. See pages 130 et seq.

Output

Standard

0

1

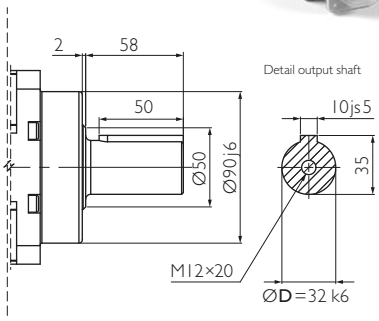

2

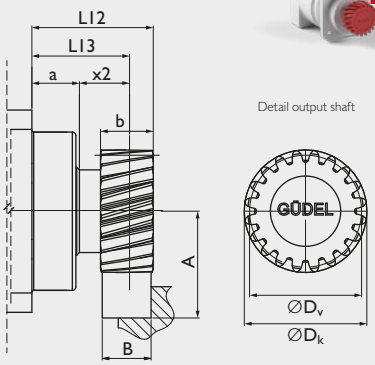

Optional

3

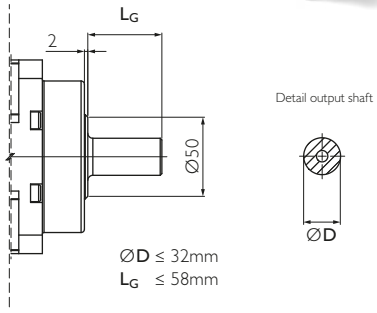

Option 3 on request. Adjustments can reduce capacity.

4

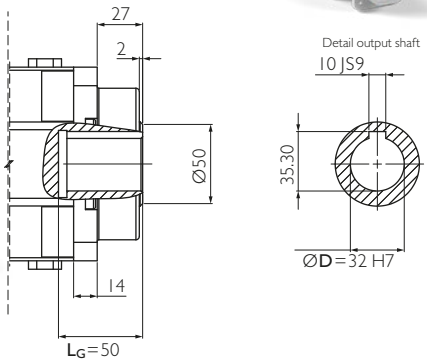

5

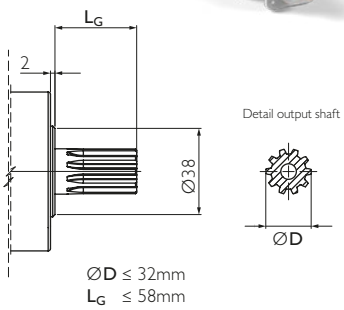

Option 5 on request. Adjustments can reduce capacity.

Example NRH 100 A0, 1-stage

Your ideal drive train

Function Package with gearbox, rack and pinion from Güdel

Material	16MnCr5 DIN 1.7131
Teeth	pressure angle α = 20°, helical teeth left, 19°31'42" hardened (58$^{+4}_{0}$ HRC), ground, crowned
Quality	6f24 DIN 3962 / 63 / 67

Pinion

		m_n	P_t	z	A	b	D_k	D_0	D_v	L12	L13	x2	a	M
Pinion 1	[-]	2	6.66	25	48.526	25	57.05	53.052	53.052	63.3	51.0	24.0	27	0.4
Pinion 2	[-]	3	10.00	20	57.831	30	69.66	63.662	63.662	69.0	54.0	27.0	27	0.7

m_n: Normal module, P_t: Transverse pitch [mm], z: Number of teeth, D_0: Pitch circle diameter for calculation, D_v: Pitch circle diameter for design, M: Weight [kg]

Available ratios		i		1-stage				
				3	4	5	7	10
Nominal torque S5 [a]		T_{2N}	[Nm]	200	260	270	250	150
Acceleration torque S5 [b]		T_{2B}	[Nm]	320	350	350	330	265
Nominal input speed S5 [c]		n_{1N}	[rpm]	2 500	2 500	2 500	2 800	2 800
Maximum input speed S5		n_{1max}	[rpm]	4 000	4 500	4 500	4 500	4 500
Nominal torque S1 [a]		T_{2N}	[Nm]	–	175	175	175	115
Acceleration torque S1 [b]		T_{2B}	[Nm]	–	250	250	250	190
Nominal input speed S1 [c]		n_{1N}	[rpm]	–	2 200	2 200	2 500	2 500
Maximum input speed S1		n_{1max}	[rpm]	–	2 500	2 500	2 800	2 800
Emergency stop torque [d]		T_{2not}	[Nm]	500	630	630	630	630
Efficiency		η	[%]	97				
Lifetime		L_h	[h]	> 20 000				
Weight		M	[kg]	7				
Angular backlash		j_t	[arcmin]	Precision **P 1** ≤ 1 / **P 3** ≤ 3 / **P 5** ≤ 5				
Torsionnal rigidity [e]		C_{t2}	[Nm/arcmin]	34	42	44	44	37
Noise [i]		L_{pA}	[dB(A)]	< 62				
Max. permitted housing temperature [g]		T	[°C]	90				
Protection class				IP 65				
Direction of rotation				Same way input / output				
Max. radial force on output shaft [f]		F_{rmax}	[N]	Center of output shaft: 6 600 / End of output shaft: 4 300				
Max. axial force on output shaft [f]		F_{amax}	[N]	5 700				
Color				Red, RAL 3003				
Inertia in kg.cm² [h]	Ø11	J_1	[kgcm²]	4.56	3.061	2.504	2.047	1.806
	Ø14			4.54	3.041	2.484	2.027	1.786
	Ø19			5.3	3.801	3.244	2.787	2.546
	Ø24			5.62	4.121	3.564	3.107	2.866
	Ø32			6.66	5.161	4.604	4.147	3.906
	Ø35			12.79	11.291	10.734	10.277	10.036
	Ø38			12.76	11.261	10.704	10.247	10.006

a) Nominal output torque when operating at n_{1N}.
b) 1000 cycles per hour max.
c) Valid for an ambient temperature of 20°C and T_{2N}. At higher ambient temperatures, please reduce speed.
d) Valid 1000 times the gearbox life.
e) Valid for an Input Ø of 24 mm in 1-stage and 19 mm in 2-stage.
f) Values for 300 rpm.
g) For other temperatures, please contact us. Nominal output torque when operating at n_{1N}.
h) Depending on the motor output shaft Ø.
i) With **i**=10 and n_{1N}=3000 rpm no load.

Rack

			Pinion 1			Pinion 2		
			Q6	Q7	Q9	Q6	Q7	Q9
Max acceleration force	F_{2B}	[N]	7 540	4 107	4 805	16 163	7 565	12 980
Max acceleration torque	T_{2B}	[Nm]	200	109	127	515	241	413
Precision			P1		P5	P1		P5
Feed force			High	Medium	Elevated	High	Medium	Elevated

Above values for rack and pinion take into consideration a number of load cycles: 1×10^6 for the rack; 1×10^7 for the pinion. Both in pulsating operation.

For proper sizing follow flowchart **calculate your ideal drive train** on pages 136 et seq.

More on the technical datasheets **your ideal drive train** on pages 120 et seq.

Input

A	for motor shaft	L ≤ 54	Ød ≤ 24	result in **LA**
B	for motor shaft	54 < L ≤ 65	Ød ≤ 38	result in **LB**
C	for motor shaft	65 < L ≤ 80	Ød ≤ 38	result in **LC**

		1-stage	2-stage
LA	[mm]	130	181
LB	[mm]	141	192
LC	[mm]	161	212

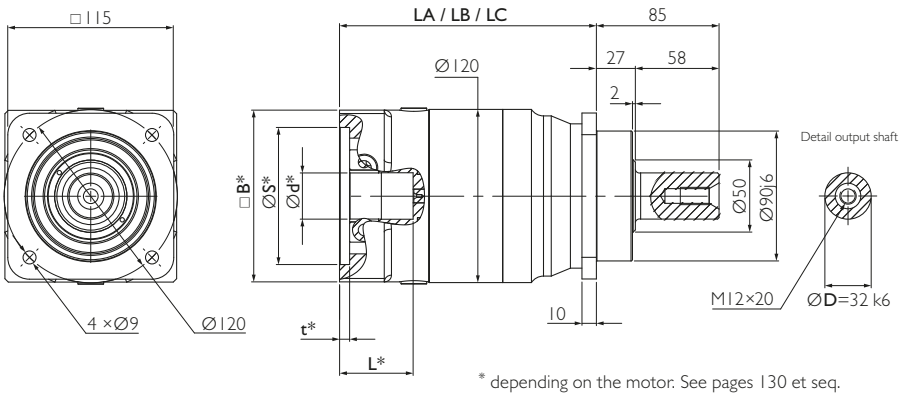

* depending on the motor. See pages 130 et seq.

Example NRH 100 A0, 2-stage

Output

Standard

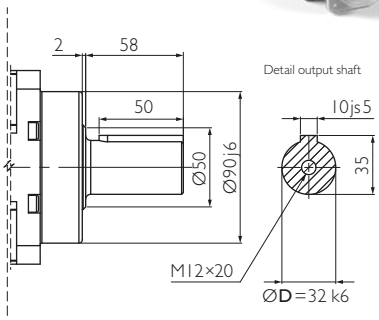

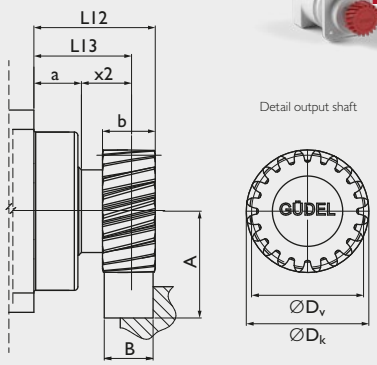

Optional

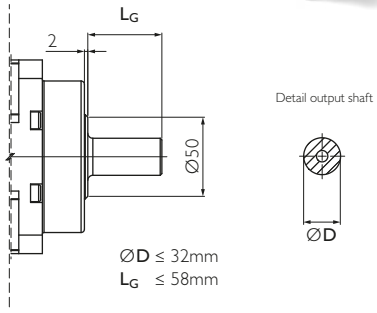

Option 3 on request. Adjustments can reduce capacity.

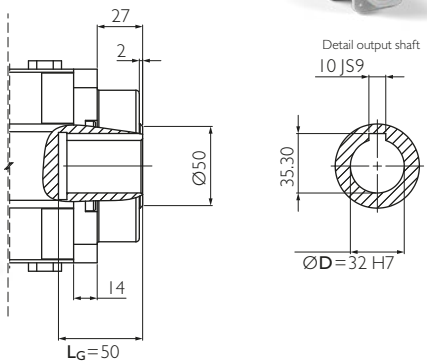

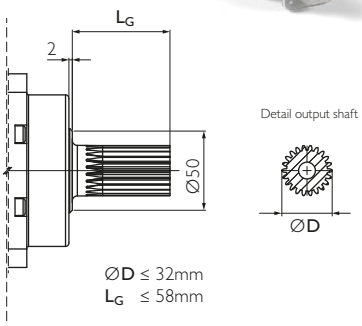

Option 5 on request. Adjustments can reduce capacity.

Your ideal drive train

Function Package with gearbox, rack and pinion from Güdel

Material	16MnCr5 DIN 1.7131
Teeth	pressure angle α = 20°, helical teeth left, 19°31'42" hardened (58$^{+4}_{0}$ HRC), ground, crowned
Quality	6f24 DIN 3962 / 63 / 67

Pinion

		m_n	P_t	z	A	b	D_k	D_0	D_v	L12	L13	x2	a	M
Pinion 1	[-]	2	6.66	25	48.526	25	57.05	53.052	53.052	63.3	51.0	24.0	27	0.4
Pinion 2	[-]	3	10.00	20	57.831	30	69.66	63.662	63.662	69.0	54.0	27.0	27	0.7

m_n: Normal module, P_t: Transverse pitch [mm], z: Number of teeth, D_0: Pitch circle diameter for calculation, D_v: Pitch circle diameter for design, M: Weight [kg]

Available ratios *		i		2-stage									
				12	16	20	25	30	35	40	50	70	100
Nominal torque S5 a)		T_{2N}	[Nm]	200	260	270	270	200	270	260	270	250	150
Acceleration torque S5 b)		T_{2B}	[Nm]	320	350	350	350	320	350	350	320	330	265
Nominal input speed S5 c)		n_{1N}	[rpm]	2 900	3 100	3 100	3 100	3 100	3 100	3 100	3 500	4 200	4 200
Maximum input speed S5		n_{1max}	[rpm]	4 500	4 500	4 500	4 500	4 500	4 500	4 500	4 500	4 500	4 500
Nominal torque S1 a)		T_{2N}	[Nm]	175	175	175	175	175	175	175	175	175	115
Acceleration torque S1 b)		T_{2B}	[Nm]	250	250	250	250	250	250	250	250	250	190
Nominal input speed S1 c)		n_{1N}	[rpm]	2 000	2 200	2 800	2 800	2 800	2 800	2 800	3 100	3 800	3 800
Maximum input speed S1		n_{1max}	[rpm]	2 900	3 100	3 100	3 100	3 100	3 100	3 100	3 500	4 200	4 200
Emergency stop torque d)		T_{2not}	[Nm]	630	630	630	630	630	630	630	630	630	630
Efficiency		η	[%]	94									
Lifetime		L_h	[h]	> 20 000									
Weight		M	[kg]	12									
Angular backlash		j_t	[arcmin]	Precision **P 1** ≤ 1 / **P 3** ≤ 3 / **P 5** ≤ 5									
Torsionnal rigidity e)		C_{t2}	[Nm/arcmin]	34	44	44	44	34	44	42	44	44	37
Noise i)		L_{pA}	[dB(A)]	< 62									
Max. permitted housing temperature g)		T	[°C]	90									
Protection class				IP 65									
Direction of rotation				Same way input / output									
Max. radial force on output shaft f)		F_{rmax}	[N]	Center of output shaft: 6 600 / End of output shaft: 4 300									
Max. axial force on output shaft f)		F_{amax}	[N]	5 700									
Color				Red, RAL 3003									
Inertia in kg.cm² h)	Ø11	J_1	[kgcm²]	2.934	2.841	2.806	2.34	1.786	1.964	1.771	1.765	1.761	1.758
	Ø14			2.914	2.821	2.786	2.32	1.766	1.944	1.751	1.745	1.741	1.738
	Ø19			3.674	3.581	3.546	3.08	2.526	2.704	2.511	2.505	2.501	2.498
	Ø24			3.994	3.901	3.866	3.4	2.846	3.024	2.831	2.825	2.821	2.818
	Ø32			5.034	4.941	4.906	4.44	3.886	4.064	3.871	3.865	3.861	3.858
	Ø35			11.164	11.071	11.036	10.57	10.016	10.194	10.001	9.995	9.991	9.988
	Ø38			11.134	11.041	11.006	10.54	9.986	10.164	9.971	9.965	9.961	9.958

* Other ratios available. 9, 15, 21, 27, 28, 49 on request.
a) Nominal output torque when operating at n_{1N}.
b) 1000 cycles per hour max.
c) Valid for an ambient temperature of 20°C and T_{2N}. At higher ambient temperatures, please reduce speed.
d) Valid 1000 times the gearbox life.
e) Valid for an input Ø of 24 mm in 1-stage and 19 mm in 2-stage.
f) Values for 300 rpm.
g) For other temperatures, please contact us. Nominal output torque when operating at n_{1N}.
h) Depending on the motor output shaft Ø.
i) With i=10 and n_{1N}=3000 rpm no load.

Rack

			Pinion 1			Pinion 2		
			Q6	Q7	Q9	Q6	Q7	Q9
Max acceleration force	F_{2B}	[N]	7 540	4 107	4 805	16 163	7 565	12 980
Max acceleration torque	T_{2B}	[Nm]	200	109	127	515	241	413
Precision			P1		P5	P1		P5
Feed force			High	Medium	Elevated	High	Medium	Elevated

Above values for rack and pinion take into consideration a number of load cycles: 1×10^6 for the rack; 1×10^7 for the pinion. Both in pulsating operation.

For proper sizing follow flowchart **calculate your ideal drive train** on pages 136 et seq.

More on the technical datasheets **your ideal drive train** on pages 120 et seq.

Input

A	for motor shaft	L ≤ 62	Ød ≤ 38	result in **LA**
B	for motor shaft	62 < L ≤ 115	Ød ≤ 48	result in **LB**

		1-stage	2-stage
LA	[mm]	160	193
LB	[mm]	212	204
LC	[mm]		224

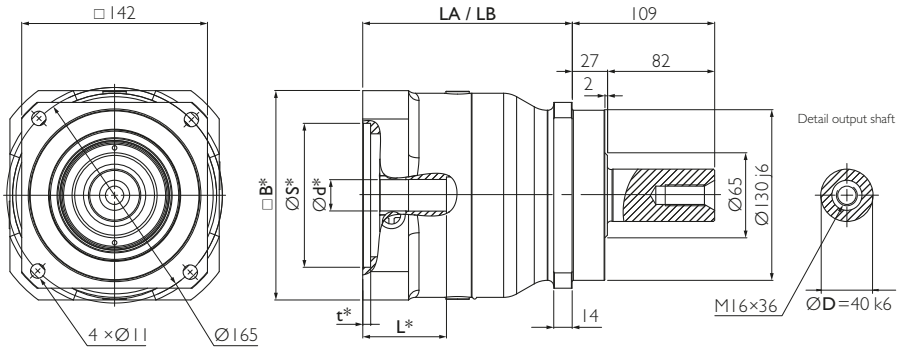

* depending on the motor. See pages 130 et seq.

Example NRH 140 A0, 1-stage

Output

Standard

0

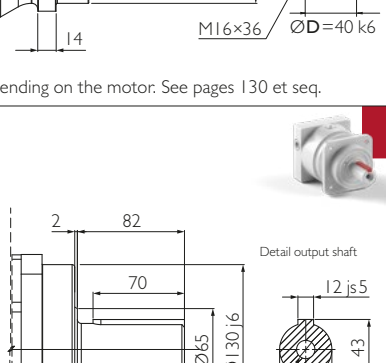

1

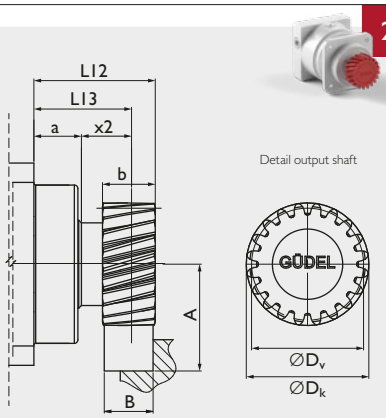

2

Optional

3

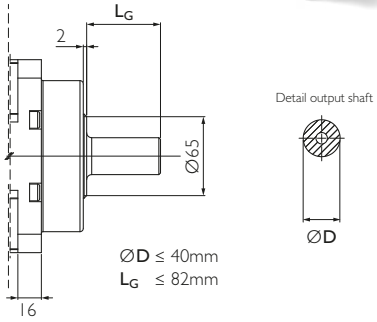

Option 3 on request. Adjustments can reduce capacity.

4

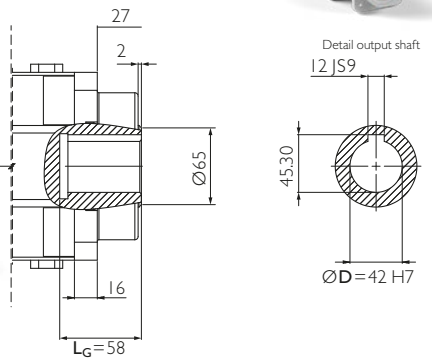

5

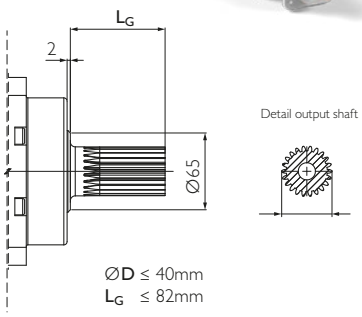

Option 5 on request. Adjustments can reduce capacity.

Your ideal drive train

Function Package with gearbox, rack and pinion from Güdel

Material	16MnCr5 DIN 1.7131
Teeth	pressure angle α = 20°, helical teeth left, 19°31'42" hardened (58$^{+4}_{0}$ HRC), ground, crowned
Quality	6f24 DIN 3962 / 63 / 67

Pinion

		m_n	P_t	z	A	b	D_k	D_0	D_v	L12	L13	x2	a	M
Pinion 1	[-]	3	10.00	22	61.014	30	76.03	70.028	70.028	69.5	54.5	27.5	27	0.8
Pinion 2	[-]	4	13.33	20	77.441	40	92.88	84.883	84.883	79.0	59.0	32.0	27	1.6

m_n: Normal module, P_t: Transverse pitch [mm], z: Number of teeth, D_0: Pitch circle diameter for calculation, D_v: Pitch circle diameter for design, M: Weight [kg]

Available ratios		i		1-stage 3	4	5	7	10
Nominal torque S5 a)		T_{2N}	[Nm]	400	490	500	470	310
Acceleration torque S5 b)		T_{2B}	[Nm]	520	650	650	650	500
Nominal input speed S5 c)		n_{1N}	[rpm]	2 100	2 100	2 100	2 600	2 600
Maximum input speed S5		n_{1max}	[rpm]	3 500	4 000	4 000	4 000	4 000
Nominal torque S1 a)		T_{2N}	[Nm]	–	260	260	260	130
Acceleration torque S1 b)		T_{2B}	[Nm]	–	370	370	370	220
Nominal input speed S1 c)		n_{1N}	[rpm]	–	1 900	1 900	2 300	2 300
Maximum input speed S1		n_{1max}	[rpm]	–	2 100	2 100	2 600	2 600
Emergency stop torque d)		T_{2not}	[Nm]	1 300	1 300	1 300	1 300	1 260
Efficiency		η	[%]	97				
Lifetime		L_h	[h]	> 20 000				
Weight		M	[kg]	15				
Angular backlash		j_t	[arcmin]	Precision **P 1** ≤ 1 / **P 3** ≤ 3 / **P 5** ≤ 5				
Torsionnal rigidity e)		C_{t2}	[Nm/arcmin]	90	101	107	106	98
Noise i)		L_{pA}	[dB(A)]	< 62				
Max. permitted housing temperature g)		T	[°C]	90				
Protection class				IP 65				
Direction of rotation				Same way input / output				
Max. radial force on output shaft f)		F_{rmax}	[N]	Center of output shaft: 9 950 / End of output shaft: 6 700				
Max. axial force on output shaft f)		F_{amax}	[N]	10 300				
Color				Red, RAL 3003				
Inertia in kg.cm² h)	Ø19	J_1	[kgcm²]	11.83	7.32	5.647	4.224	3.499
	Ø24			12.15	7.64	5.967	4.544	3.819
	Ø32			18.01	13.5	11.827	10.404	9.679
	Ø35			18.6	14.09	12.417	10.994	10.269
	Ø38			19.07	14.56	12.887	11.464	10.739
	Ø42			19.4	14.89	13.217	11.794	11.069
	Ø48			23.38	18.87	17.197	15.774	15.049

a) Nominal output torque when operating at n_{1N}.
b) 1000 cycles per hour max.
c) Valid for an ambient temperature of 20°C and T_{2N}. At higher ambient temperatures, please reduce speed.
d) Valid 1000 times the gearbox life.
e) Valid for an input Ø of 38 mm in 1-stage and 24 mm in 2-stage.
f) Values for 300 rpm.
g) For other temperatures, please contact us. Nominal output torque when operating at n_{1N}.
h) Depending on the motor output shaft Ø.
i) With **i**=10 and n_{1N}=3000 rpm no load.

Rack

			Pinion 1 Q6	Q7	Q9	Pinion 2 Q6	Q7	Q9
Max acceleration force	F_{2B}	[N]	16 230	8 715	12 919	28 585	14 084	24 045
Max acceleration torque	T_{2B}	[Nm]	568	305	452	1 213	598	1 021
Precision			P1		P5	P1		P5
Feed force			High	Medium	Elevated	High	Medium	Elevated

Above values for rack and pinion take into consideration a number of load cycles: 1×10^6 for the rack; 1×10^7 for the pinion. Both in pulsating operation.

For proper sizing follow flowchart **calculate your ideal drive train** on pages 136 et seq.

More on the technical datasheets **your ideal drive train** on pages 120 et seq.

Input

A	for motor shaft	L ≤ 54	Ød ≤ 32	result in **LA**
B	for motor shaft	54 < L ≤ 65	Ød ≤ 38	result in **LB**
C	for motor shaft	65 < L ≤ 80	Ød ≤ 38	result in **LC**

		1-stage	2-stage
LA	[mm]	160	193
LB	[mm]	212	204
LC	[mm]		224

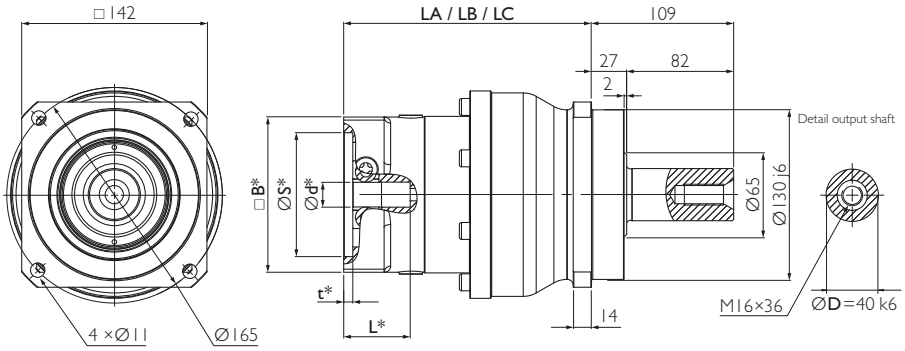

* depending on the motor. See pages 130 et seq.

Example NRH 140 A0, 2-stage

Output

Standard

0

1

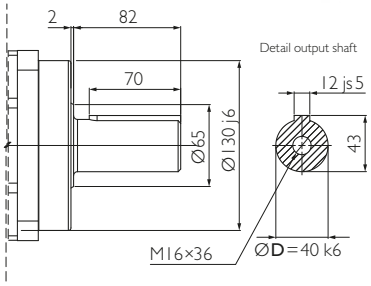

2

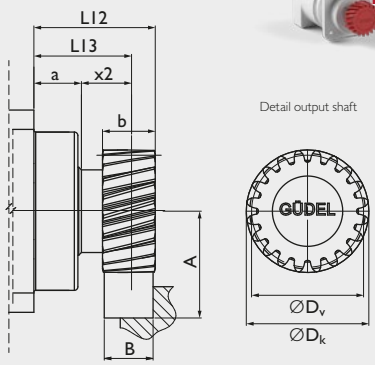

Optional

3

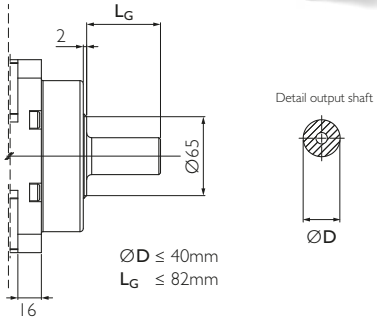

Option 3 on request. Adjustments can reduce capacity.

4

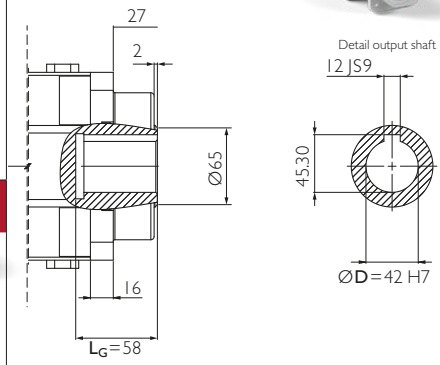

5

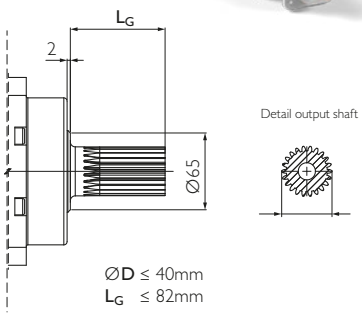

Option 5 on request. Adjustments can reduce capacity.

Your ideal drive train

Function Package with gearbox, rack and pinion from Güdel

Material	16MnCr5 DIN 1.7131
Teeth	pressure angle α = 20°, helical teeth left, 19°31'42" hardened (58^{+4}_{0} HRC), ground, crowned
Quality	6f24 DIN 3962 / 63 / 67

Pinion

		m_n	P_t	z	A	b	D_k	D_0	D_v	L12	L13	x2	a	M
Pinion 1	[-]	3	10.00	22	61.014	30	76.03	70.028	70.028	69.5	54.5	27.5	27	0.8
Pinion 2	[-]	4	13.33	20	77.441	40	92.88	84.883	84.883	79.0	59.0	32.0	27	1.6

m_n: Normal module, P_t: Transverse pitch [mm], z: Number of teeth, D_0: Pitch circle diameter for calculation, D_v: Pitch circle diameter for design, M: Weight [kg]

Available ratios *		i		2-stage									
				12	16	20	25	30	35	40	50	70	100
Nominal torque S5 a)		T_{2N}	[Nm]	400	490	500	500	400	500	490	500	470	310
Acceleration torque S5 b)		T_{2B}	[Nm]	520	650	650	650	600	650	650	650	650	500
Nominal input speed S5 c)		n_{1N}	[rpm]	2 700	2 900	2 900	2 900	2 900	2 900	2 900	3 200	3 200	3 900
Maximum input speed S5		n_{1max}	[rpm]	4 500	4 500	4 500	5 000	5 000	5 000	5 000	5 000	5 000	5 000
Nominal torque S1 a)		T_{2N}	[Nm]	260	260	260	260	260	260	260	260	260	150
Acceleration torque S1 b)		T_{2B}	[Nm]	370	370	370	370	370	370	370	370	370	220
Nominal input speed S1 c)		n_{1N}	[rpm]	1 900	2 600	2 600	2 600	2 600	2 600	2 600	2 900	2 900	3 500
Maximum input speed S1		n_{1max}	[rpm]	2 700	2 900	2 900	2 900	2 900	2 900	2 900	3 200	3 200	3 900
Emergency stop torque d)		T_{2not}	[Nm]	1 300	1 300	1 300	1 300	1 300	1 300	1 300	1 300	1 300	1 260
Efficiency		η	[%]	94									
Lifetime		L_h	[h]	> 20 000									
Weight		M	[kg]	17									
Angular backlash		j_t	[arcmin]	Precision **P 1** ≤ 1 / **P 3** ≤ 3 / **P 5** ≤ 5									
Torsionnal rigidity e)		C_{t2}	[Nm/arcmin]	80	91	97	97	80	97	91	97	95	80
Noise i)		L_{pA}	[dB(A)]	< 62									
Max. permitted housing temperature g)		T	[°C]	90									
Protection class				IP 65									
Direction of rotation				Same way input / output									
Max. radial force on output shaft f)		F_{rmax}	[N]	Center of output shaft: 9 950 / End of output shaft: 6 700									
Max. axial force on output shaft f)		F_{amax}	[N]	10 300									
Color				Red, RAL 3003									
Inertia in kg.cm² h)	Ø14	J_1	[kgcm²]	3.251	2.969	2.864	2.369	1.82	1.971	1.775	1.759	1.744	1.737
	Ø19			4.011	3.729	3.624	3.129	2.58	2.731	2.535	2.519	2.504	2.497
	Ø24			4.331	4.049	3.944	3.449	2.9	3.051	2.855	2.839	2.824	2.817
	Ø32			5.371	5.089	4.984	4.489	3.94	4.091	3.895	3.879	3.864	3.857
	Ø35			11.501	11.219	11.114	10.619	10.07	10.221	10.025	10.009	9.994	9.987
	Ø38			11.471	11.189	11.084	10.589	10.04	10.191	9.995	9.979	9.964	9.957

* Other ratios available. 9, 15, 21, 27, 28, 49 on request.

a) Nominal output torque when operating at n_{1N}.

b) 1000 cycles per hour max.

c) Valid for an ambient temperature of 20°C and T_{2N}. At higher ambient temperatures, please reduce speed.

d) Valid 1000 times the gearbox life.

e) Valid for an input Ø of 38 mm in 1-stage and 24 mm in 2-stage.

f) Values for 300 rpm.

g) For other temperatures, please contact us. Nominal output torque when operating at n_{1N}.

h) Depending on the motor output shaft Ø.

i) With **i**=10 and n_{1N}=3000 rpm no load.

Rack

			Pinion 1			Pinion 2		
			Q6	Q7	Q9	Q6	Q7	Q9
Max acceleration force	F_{2B}	[N]	16 230	8 715	12 919	28 585	14 084	24 045
Max acceleration torque	T_{2B}	[Nm]	568	305	452	1 213	598	1 021
Precision			P1		P5	P1		P5
Feed force			High	Medium	Elevated	High	Medium	Elevated

Above values for rack and pinion take into consideration a number of load cycles: 1×10^6 for the rack; 1×10^7 for the pinion. Both in pulsating operation.

For proper sizing follow flowchart **calculate your ideal drive train** on pages 136 et seq.

More on the technical datasheets **your ideal drive train** on pages 120 et seq.

Input					Output
A	for motor shaft	L ≤ 50	Ød ≤ 19	result in **LA**	0
B	for motor shaft	50 < L ≤ 55	Ød ≤ 24	result in **LB**	
C	for motor shaft	55 < L ≤ 60	Ød ≤ 24	result in **LC**	

		1-stage	2-stage
LA	[mm]	108	145
LB	[mm]	116	153
LC	[mm]	121	158

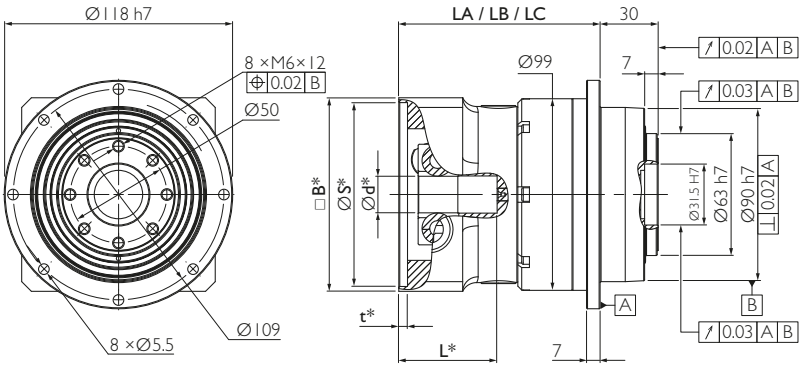

* depending on the motor. See pages 130 et seq.

Example NRHP 080 A0, 1-stage

Your ideal drive train

Function Package with gearbox, rack and pinion from Güdel

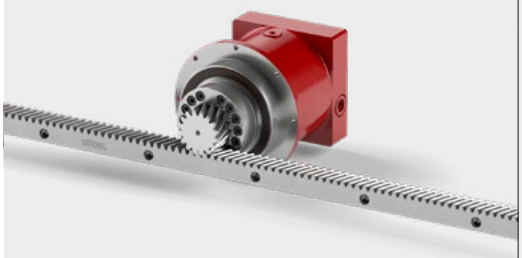

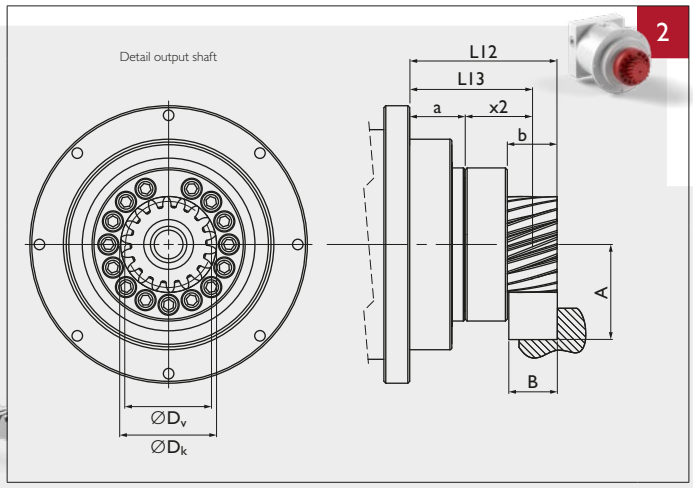

Material	16MnCr5 DIN 1.7131
Teeth	pressure angle α = 20°, helical teeth left, 19°31'42", hardened (58 $^{+4}_{0}$ HRC), ground, crowned
Quality	6f24 DIN 3962 / 63 / 67

Pinion

		m_n	P_t	z	A	b	D_k	D_0	D_v	L12	L13	x2	a	M
Pinion 1	[-]	2	6.66	16	39.577	26	39.15	33.953	35.153	75.0	62.0	32.0	30	0.6

m_n: Normal module, P_t: Transverse pitch [mm], z: Number of teeth, D_0: Pitch circle diameter for calculation, D_v: Pitch circle diameter for design, M: Weight [kg]

Available ratios		i		1-stage				
				3	4	5	7	10
Nominal torque S5 a)		T_{2N}	[Nm]	65	75	76	76	60
Acceleration torque S5 b)		T_{2B}	[Nm]	85	110	110	110	90
Nominal input speed S5 c)		n_{1N}	[rpm]	2 300	2 300	2 900	3 100	3 100
Maximum input speed S5		n_{1max}	[rpm]	4 000	5 000	6 000	6 000	6 000
Nominal torque S1 a)		T_{2N}	[Nm]	–	50	50	50	35
Acceleration torque S1 b)		T_{2B}	[Nm]	–	72	72	72	44
Nominal input speed S1 c)		n_{1N}	[rpm]	–	2 000	2 000	2 200	2 200
Maximum input speed S1		n_{1max}	[rpm]	–	2 900	2 900	3 100	3 100
Emergency stop torque d)		T_{2not}	[Nm]	250	250	250	250	200
Efficiency		η	[%]	97				
Lifetime		L_h	[h]	> 20 000				
Weight		M	[kg]	4.9				
Angular backlash		j_t	[arcmin]	Precision **P 1** ≤ 1 / **P 3** ≤ 3 / **P 5** ≤ 5				
Tilting moment		M_{kmax}	[Nm]	348				
Torsionnal rigidity e)		C_{t2}	[Nm/arcmin]	32	38	40	36	28
Tilting rigidity e)		C_{t2}	[Nm/arcmin]	252				
Noise i)		L_{pA}	[dB(A)]	< 62				
Max. permitted housing temperature g)		T	[°C]	90				
Protection class				IP 65				
Direction of rotation				Same way input / output				
Max. axial force on output shaft f)		F_{amax}	[N]	2 300				
Color				Red, RAL 3003				
Inertia in kg.cm² h)	Ø11	J_1	[kgcm²]	1.897	1.327	1.083	0.871	0.759
	Ø14			1.887	1.317	1.073	0.861	0.749
	Ø19			2.65	2.08	1.836	1.624	1.512
	Ø24			2.978	2.408	2.164	1.952	1.84

a) Nominal output torque when operating at n_{1N}.
b) 1000 cycles per hour max.
c) Valid for an ambient temperature of 20°C and T_{2N}. At higher ambient temperatures, please reduce speed.
d) Valid 1000 times the gearbox life.
e) Valid for an Input Ø of 19 mm in 1-stage and 14 mm in 2-stage.
f) Values for 300 rpm.
g) For other temperatures, please contact us. Nominal output torque when operating at n_{1N}.
h) Depending on the motor output shaft Ø.
i) With **i**=10 and n_{1N}=3000 rpm no load.

Rack

			Pinion 1		
			Q6	Q7	Q9
Max acceleration force	F_{2B}	[N]	7 075	1 760	4 752
Max acceleration torque	T_{2B}	[Nm]	120	30	81
Precision			P1		P5
Feed force			High	Medium	Elevated

Above values for rack and pinion take into consideration a number of load cycles: 1×10^6 for the rack; 1×10^7 for the pinion. Both in pulsating operation.

For proper sizing follow flowchart **calculate your ideal drive train** on pages 136 et seq.

More on the technical datasheets **your ideal drive train** on pages 120 et seq.

Input				Output
A	for motor shaft	L ≤ 50	Ød ≤ 19	result in **LA**
B	for motor shaft	50 < L ≤ 55	Ød ≤ 24	result in **LB**
C	for motor shaft	55 < L ≤ 60	Ød ≤ 24	result in **LC**

		1-stage	2-stage
LA	[mm]	108	145
LB	[mm]	116	153
LC	[mm]	121	158

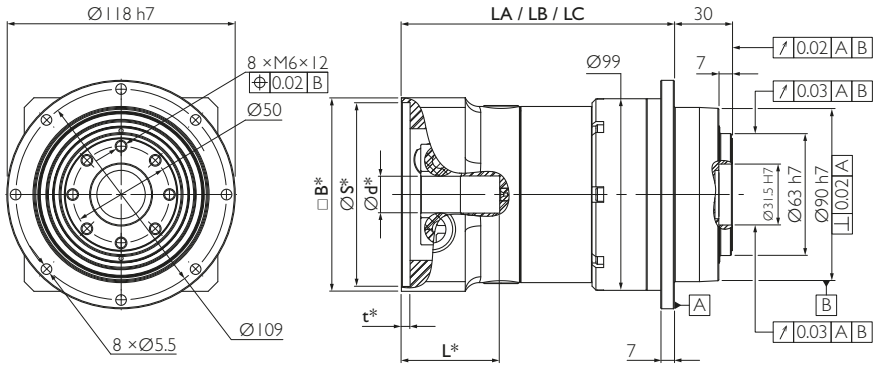

* depending on the motor. See pages 130 et seq.

Example NRHP 080 A0, 2-stage

Your ideal drive train

Function Package with gearbox, rack and pinion from Güdel

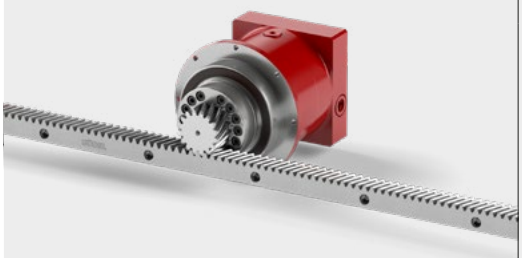

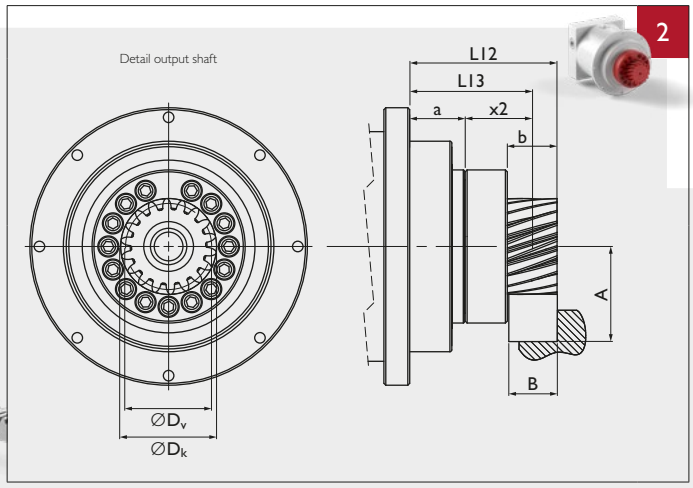

Material 16MnCr5
DIN 1.7131

Teeth pressure angle α = 20°, helical teeth left, 19°31'42", hardened (58^{+4}_{0} HRC), ground, crowned

Quality 6f24 DIN 3962 / 63 / 67

Pinion

		m_n	P_t	z	A	b	D_k	D_0	D_v	L12	L13	x2	a	M
Pinion I	[-]	2	6.66	16	39.577	26	39.15	33.953	35.153	75.0	62.0	32.0	30	0.6

m_n: Normal module, P_t: Transverse pitch [mm], z: Number of teeth, D_0: Pitch circle diameter for calculation, D_v: Pitch circle diameter for design, M: Weight [kg]

Available ratios *		i		2-stage									
				12	16	20	25	30	35	40	50	70	100
Nominal torque S5 a)		T_{2N}	[Nm]	75	90	90	90	75	90	90	90	90	60
Acceleration torque S5 b)		T_{2B}	[Nm]	85	110	110	110	90	110	110	110	110	90
Nominal input speed S5 c)		n_{1N}	[rpm]	3 600	3 600	3 600	3 600	3 600	3 500	3 500	3 800	4 500	4 500
Maximum input speed S5		n_{1max}	[rpm]	6 000	6 000	6 000	6 000	6 000	6 000	6 000	6 000	6 000	6 000
Nominal torque S1 a)		T_{2N}	[Nm]	50	50	50	50	40	50	50	50	50	35
Acceleration torque S1 b)		T_{2B}	[Nm]	72	72	72	72	72	72	72	72	72	47
Nominal input speed S1 c)		n_{1N}	[rpm]	2 300	2 500	2 500	2 500	2 500	2 500	2 500	3 000	2 800	3 100
Maximum input speed S1		n_{1max}	[rpm]	3 300	3 500	3 500	3 500	3 500	3 500	3 500	3 800	4 000	4 500
Emergency stop torque d)		T_{2not}	[Nm]	250	250	250	250	250	250	250	250	250	200
Efficiency		η	[%]	94									
Lifetime		L_h	[h]	> 20 000									
Weight		M	[kg]	6.5									
Angular backlash		j_t	[arcmin]	Precision **P 1** ≤ 1 / **P 3** ≤ 3 / **P 5** ≤ 5									
Tilting moment		M_{kmax}	[Nm]	348									
Torsionnal rigidity e)		C_{t2}	[Nm/arcmin]	32	38	38	39	32	39	35	36	34	27
Tilting rigidity e)		C_{t2}	[Nm/arcmin]	252									
Noise i)		L_{pA}	[dB(A)]	< 62									
Max. permitted housing temperature g)		T	[°C]	90									
Protection class				IP 65									
Direction of rotation				Same way input / output									
Max. axial force on output shaft f)		F_{amax}	[N]	2 300									
Color				Red, RAL 3003									
Inertia in kg.cm² h)	Ø11	J_1	[kgcm²]	0.937	0.937	0.886	0.8	0.693	0.727	0.688	0.685	0.683	0.6559
	Ø14			0.927	0.927	0.876	0.79	0.683	0.717	0.678	0.675	0.673	0.6459
	Ø19			1.69	1.69	1.639	1.553	1.446	1.48	1.441	1.438	1.436	1.4089
	Ø24			2.018	2.018	1.967	1.881	1.774	1.808	1.769	1.766	1.764	1.7369

* Other ratios available. 9, 15, 21, 27, 28, 49 on request.
a) Nominal output torque when operating at n_{1N}.
b) 1000 cycles per hour max.
c) Valid for an ambient temperature of 20°C and T_{2N}. At higher ambient temperatures, please reduce speed.
d) Valid 1000 times the gearbox life.
e) Valid for an Input Ø of 19 mm in 1-stage and 14 mm in 2-stage.
f) Values for 300 rpm.
g) For other temperatures, please contact us. Nominal output torque when operating at n_{1N}.
h) Depending on the motor output shaft Ø.
i) With **i**=10 and n_{1N}=3000 rpm no load.

Rack

			Pinion 1		
			Q6	Q7	Q9
Max acceleration force	F_{2B}	[N]	7 075	1 760	4 752
Max acceleration torque	T_{2B}	[Nm]	120	30	81
Precision			P1		P5
Feed force			High	Medium	Elevated

Above values for rack and pinion take into consideration a number of load cycles: 1×10^6 for the rack; 1×10^7 for the pinion. Both in pulsating operation.

For proper sizing follow flowchart **calculate your ideal drive train** on pages 136 et seq.

More on the technical datasheets **your ideal drive train** on pages 120 et seq.

Input

A	for motor shaft	L ≤ 54	Ød ≤ 24	result in **LA**
B	for motor shaft	54 < L ≤ 65	Ød ≤ 38	result in **LB**
C	for motor shaft	65 < L ≤ 80	Ød ≤ 38	result in **LC**

Output

0

		1-stage	2-stage
LA	[mm]	132.1	183.1
LB	[mm]	143.1	194.1
LC	[mm]	163.1	214.1

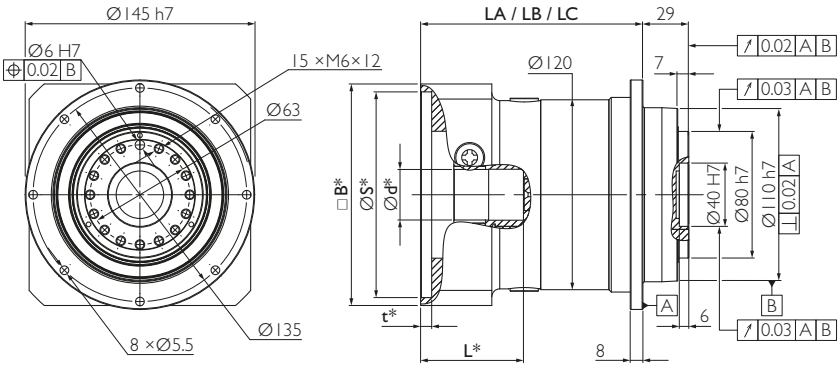

* depending on the motor. See pages 130 et seq.

Example NRHP 100 A0, 1-stage

Your ideal drive train

Function Package with gearbox, rack and pinion from Güdel

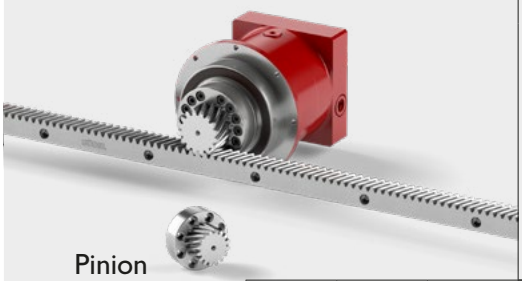

2

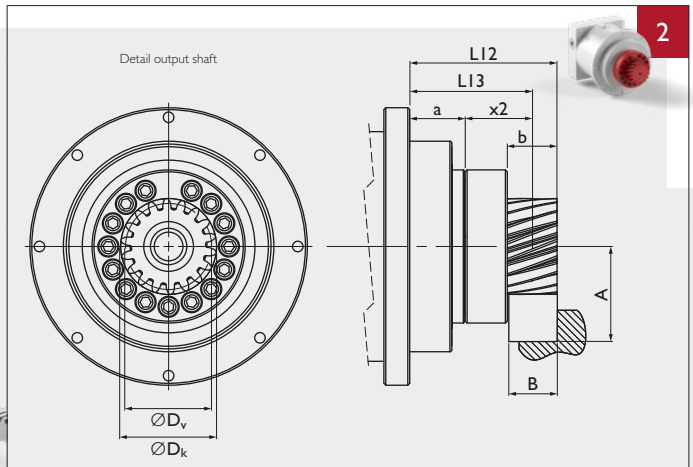

Material 16MnCr5
DIN 1.7131

Teeth pressure angle α = 20°, helical teeth left, 19°31'42", hardened (58^{+4}_{0} HRC), ground, crowned

Quality 6f24 DIN 3962 / 63 / 67

Pinion

		m_n	P_t	z	A	b	D_k	D_0	D_v	L12	L13	x2	a	M
Pinion 1	[-]	2	6.66	16	39.577	26	39.15	33.953	35.153	77.0	64.0	35.0	29	1.0
Pinion 2	[-]	2	6.66	21	44.282	26	48.56	44.563	44.563	77.0	64.0	35.0	29	1.0
Pinion 3	[-]	2.5	8.33	16	43.471	26	48.94	42.441	43.941	77.0	64.0	35.0	29	1.0
Pinion 4	[-]	3	10.00	14	49.182	32	52.36	44.563	46.363	83.0	67.0	38.0	29	1.2

m_n: Normal module, P_t: Transverse pitch [mm], z: Number of teeth, D_0: Pitch circle diameter for calculation, D_v: Pitch circle diameter for design, M: Weight [kg]

Available ratios		i		1-stage				
				3	4	5	7	10
Nominal torque S5 a)		T_{2N}	[Nm]	200	260	270	250	150
Acceleration torque S5 b)		T_{2B}	[Nm]	320	350	350	330	265
Nominal input speed S5 c)		n_{1N}	[rpm]	1 300	2 300	2 600	2 600	2 600
Maximum input speed S5		n_{1max}	[rpm]	1 700	4 500	4 500	4 500	4 500
Nominal torque S1 a)		T_{2N}	[Nm]	–	175	175	175	115
Acceleration torque S1 b)		T_{2B}	[Nm]	–	250	250	250	190
Nominal input speed S1 c)		n_{1N}	[rpm]	–	1 500	1 600	1 800	1 800
Maximum input speed S1		n_{1max}	[rpm]	–	2 000	2 000	2 800	2 800
Emergency stop torque d)		T_{2not}	[Nm]	500	630	630	630	630
Efficiency		η	[%]	97				
Lifetime		L_h	[h]	> 20 000				
Weight		M	[kg]	9				
Angular backlash		j_t	[arcmin]	Precision **P 1** ≤ 1 / **P 3** ≤ 3 / **P 5** ≤ 5				
Tilting moment		M_{kmax}	[Nm]	614				
Torsionnal rigidity e)		C_{t2}	[Nm/arcmin]	78	82	88	78	64
Tilting rigidity e)		C_{t2}	[Nm/arcmin]	458				
Noise i)		L_{pA}	[dB(A)]	< 62				
Max. permitted housing temperature g)		T	[°C]	90				
Protection class				IP 65				
Direction of rotation				Same way input / output				
Max. axial force on output shaft f)		F_{amax}	[N]	4 800				
Color				Red, RAL 3003				
Inertia in kg.cm² h)	Ø11	J_1	[kgcm²]	6.134	3.95	3.072	2.337	1.948
	Ø14			6.114	3.93	3.052	2.317	1.928
	Ø19			6.874	4.69	3.812	3.077	2.688
	Ø24			7.194	5.01	4.132	3.397	3.008
	Ø32			8.234	6.05	5.172	4.437	4.048
	Ø35			14.364	12.18	11.302	10.567	10.178
	Ø38			14.334	12.15	11.272	10.537	10.148

a) Nominal output torque when operating at n_{1N}.
b) 1000 cycles per hour max.
c) Valid for an ambient temperature of 20°C and T_{2N}. At higher ambient temperatures, please reduce speed.
d) Valid 1000 times the gearbox life.
e) Valid for an input Ø of 24 mm in 1-stage and 19 mm in 2-stage.
f) Values for 300 rpm.
g) For other temperatures, please contact us. Nominal output torque when operating at n_{1N}.
h) Depending on the motor output shaft Ø.
i) With **i**=10 and n_{1N}=3000 rpm no load.

Rack

			Pinion 1			Pinion 2			Pinion 3			Pinion 4		
			Q6	Q7	Q9	Q6	Q7	Q9	Q6	Q7	Q9	Q6	Q7	Q9
Max acceleration force	F_{2B}	[N]	7 075	1 760	4 752	7 505	3 217	5 016	10 570	2 813	7 620	15 076	3 661	11 052
Max acceleration torque	T_{2B}	[Nm]	120	30	81	167	72	112	224	60	162	336	82	246
Precision			P1		P5	P1		P5	P1		P5	P1		P5
Feed force			High	Medium	Elevated	High	Medium	Elevated	High	Medium	Elevated	High	Medium	Elevated

Above values for rack and pinion take into consideration a number of load cycles: 1×10^6 for the rack; 1×10^7 for the pinion. Both in pulsating operation.

For proper sizing follow flowchart **calculate your ideal drive train** on pages 136 et seq.

More on the technical datasheets **your ideal drive train** on pages 120 et seq.

Input				Output
A	for motor shaft	L ≤ 54	Ød ≤ 24	result in **LA**
B	for motor shaft	54 < L ≤ 65	Ød ≤ 38	result in **LB**
C	for motor shaft	65 < L ≤ 80	Ød ≤ 38	result in **LC**

		1-stage	2-stage
LA	[mm]	132.1	183.1
LB	[mm]	143.1	194.1
LC	[mm]	163.1	214.1

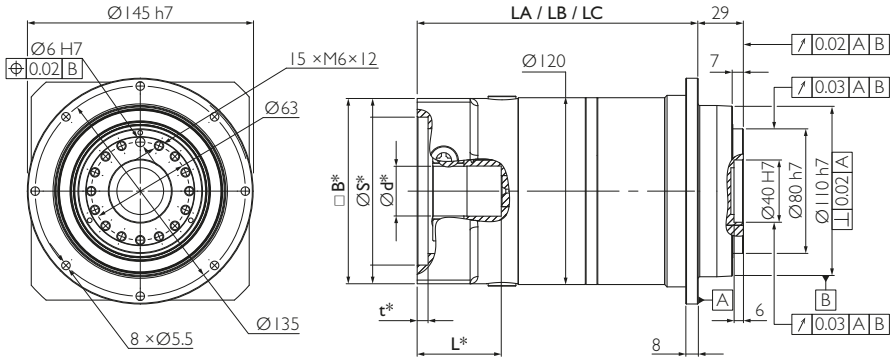

* depending on the motor. See pages 130 et seq.

Example NRHP 100 A0, 2-stage

Your ideal drive train

Function Package with gearbox, rack and pinion from Güdel

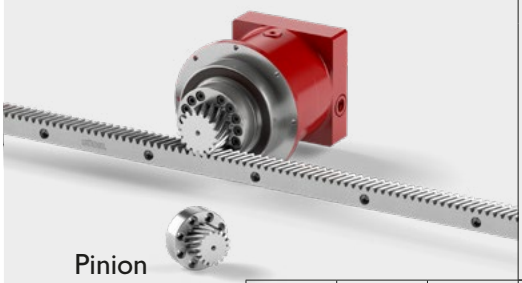

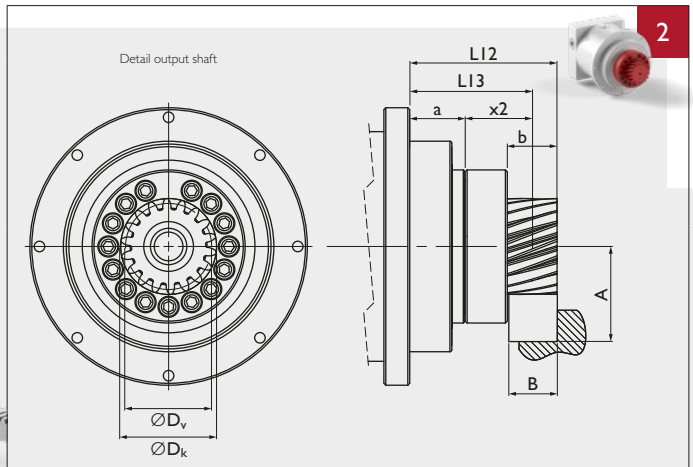

Material 16MnCr5 DIN 1.7131

Teeth pressure angle α = 20°, helical teeth left, 19°31'42", hardened (58^{+4}_{0} HRC), ground, crowned

Quality 6f24 DIN 3962 / 63 / 67

Pinion

		m_n	P_t	z	A	b	D_k	D_0	D_v	L12	L13	x2	a	M
Pinion 1	[-]	2	6.66	16	39.577	26	39.15	33.953	35.153	77.0	64.0	35.0	29	1.0
Pinion 2	[-]	2	6.66	21	44.282	26	48.56	44.563	44.563	77.0	64.0	35.0	29	1.0
Pinion 3	[-]	2.5	8.33	16	43.471	26	48.94	42.441	43.941	77.0	64.0	35.0	29	1.0
Pinion 4	[-]	3	10.00	14	49.182	32	52.36	44.563	46.363	83.0	67.0	38.0	29	1.2

m_n: Normal module, P_t: Transverse pitch [mm], z: Number of teeth, D_0: Pitch circle diameter for calculation, D_v: Pitch circle diameter for design, M: Weight [kg]

Available ratios *		i		2-stage									
				12	16	20	25	30	35	40	50	70	100
Nominal torque S5 a)		T_{2N}	[Nm]	200	260	270	270	200	270	260	270	250	150
Acceleration torque S5 b)		T_{2B}	[Nm]	320	350	350	350	320	350	350	320	330	265
Nominal input speed S5 c)		n_{1N}	[rpm]	2 400	2 900	2 900	2 900	2 900	2 900	2 900	3 200	3 600	4 300
Maximum input speed S5		n_{1max}	[rpm]	5 000	6 000	6 000	6 000	6 000	6 000	6 000	6 000	6 000	6 000
Nominal torque S1 a)		T_{2N}	[Nm]	175	175	175	175	175	175	175	175	175	115
Acceleration torque S1 b)		T_{2B}	[Nm]	250	250	250	250	250	250	250	250	250	190
Nominal input speed S1 c)		n_{1N}	[rpm]	2 000	2 000	2 000	2 000	2 000	2 000	2 000	2 000	2 000	2 500
Maximum input speed S1		n_{1max}	[rpm]	3 000	3 100	3 100	3 100	3 100	3 100	3 100	3 500	3 500	4 000
Emergency stop torque d)		T_{2not}	[Nm]	630	630	630	630	630	630	630	630	630	630
Efficiency		η	[%]	94									
Lifetime		L_h	[h]	> 20 000									
Weight		M	[kg]	12.5									
Angular backlash		j_t	[arcmin]	Precision **P 1** ≤ 1 / **P 3** ≤ 3 / **P 5** ≤ 5									
Tilting moment		M_{kmax}	[Nm]	614									
Torsionnal rigidity e)		C_{t2}	[Nm/arcmin]	78	81	87	87	87	87	81	87	77	64
Tilting rigidity e)		C_{t2}	[Nm/arcmin]	458									
Noise i)		L_{pA}	[dB(A)]	< 62									
Max. permitted housing temperature g)		T	[°C]	90									
Protection class				IP 65									
Direction of rotation				Same way input / output									
Max. axial force on output shaft f)		F_{amax}	[N]	4 800									
Color				Red, RAL 3003									
Inertia in kg.cm² h)	Ø11	J_1	[kgcm²]	3.033	2.896	2.841	2.363	1.802	1.976	1.78	1.771	1.764	1.76
	Ø14			3.013	2.876	2.821	2.343	1.782	1.956	1.76	1.751	1.744	1.74
	Ø19			3.773	3.636	3.581	3.103	2.542	2.716	2.52	2.511	2.504	2.5
	Ø24			4.093	3.956	3.901	3.423	2.862	3.036	2.84	2.831	2.824	2.82
	Ø32			5.133	4.996	4.941	4.463	3.902	4.076	3.88	3.871	3.864	3.86
	Ø35			11.263	11.126	11.071	10.593	10.032	10.206	10.01	10.001	9.994	9.99
	Ø38			11.233	11.096	11.041	10.563	10.002	10.176	9.98	9.971	9.964	9.96

* Other ratios available. 9, 15, 21, 27, 28, 49 on request.

a) Nominal output torque when operating at n_{1N}.

b) 1000 cycles per hour max.

c) Valid for an ambient temperature of 20°C and T_{2N}. At higher ambient temperatures, please reduce speed.

d) Valid 1000 times the gearbox life.

e) Valid for an input Ø of 24 mm in 1-stage and 19 mm in 2-stage.

f) Values for 300 rpm.

g) For other temperatures, please contact us. Nominal output torque when operating at n_{1N}.

h) Depending on the motor output shaft Ø.

i) With **i**=10 and n_{1N}=3000 rpm no load.

Rack

			Pinion 1			Pinion 2			Pinion 3			Pinion 4		
			Q6	Q7	Q9	Q6	Q7	Q9	Q6	Q7	Q9	Q6	Q7	Q9
Max acceleration force	F_{2B}	[N]	7 075	1 760	4 752	7 505	3 217	5 016	10 570	2 813	7 620	15 076	3 661	11 052
Max acceleration torque	T_{2B}	[Nm]	120	30	81	167	72	112	224	60	162	336	82	246
Precision			P1		P5	P1		P5	P1		P5	P1		P5
Feed force			High	Medium	Elevated	High	Medium	Elevated	High	Medium	Elevated	High	Medium	Elevated

Above values for rack and pinion take into consideration a number of load cycles: 1×10^6 for the rack; 1×10^7 for the pinion. Both in pulsating operation.

For proper sizing follow flowchart **calculate your ideal drive train** on pages 136 et seq.

More on the technical datasheets **your ideal drive train** on pages 120 et seq.

Input					Output
A	for motor shaft	L ≤ 62	Ød ≤ 38	result in **LA**	0
B	for motor shaft	62 < L ≤ 115	Ød ≤ 48	result in **LB**	

		1-stage	2-stage
LA	[mm]	156.5	189.5
LB	[mm]	208.5	200.5
LC	[mm]		220.5

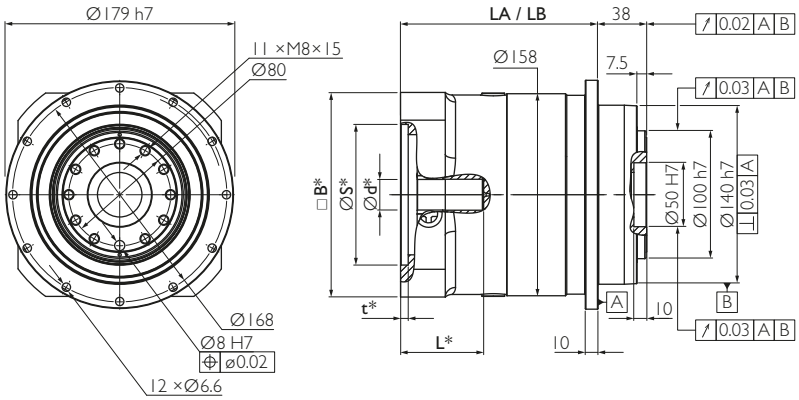

* depending on the motor. See pages 130 et seq.

Example NRHP 140 A0, 1-stage

Your ideal drive train

Function Package with gearbox, rack and pinion from Güdel

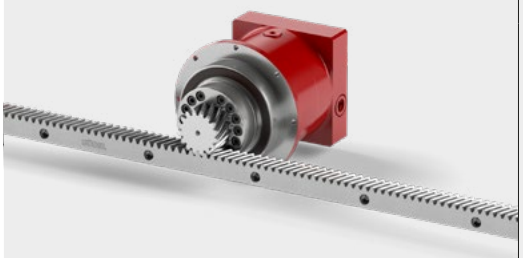

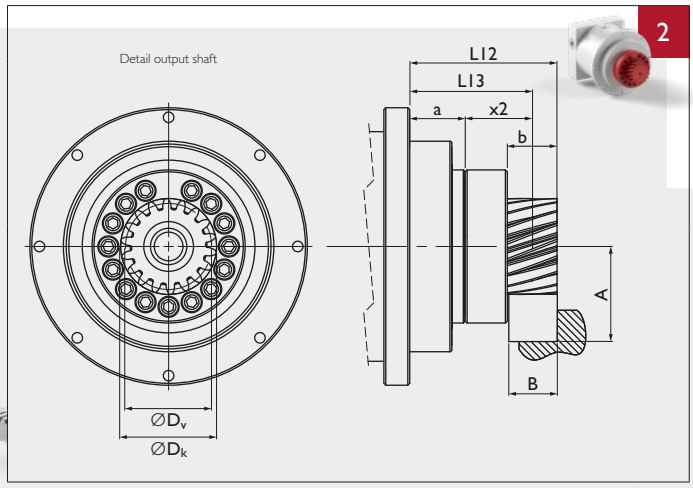

2

Material 16MnCr5
DIN 1.7131

Teeth pressure angle α = 20°, helical teeth left, 19°31'42", hardened (58^{+4}_{0} HRC), ground, crowned

Quality 6f24 DIN 3962 / 63 / 67

Pinion

		m_n	P_t	z	A	b	D_k	D_0	D_v	L12	L13	x2	a	M
Pinion 1	[-]	2.5	8.33	21	49.352	26	60.70	55.704	55.704	89.0	76.0	38.0	38	1.9
Pinion 2	[-]	3	10.00	18	54.648	32	63.30	57.296	57.296	95.0	79.0	41.0	38	2.0

m_n: Normal module, P_t: Transverse pitch [mm], z: Number of teeth, D_0: Pitch circle diameter for calculation, D_v: Pitch circle diameter for design, M: Weight [kg]

Available ratios		i		1-stage 3	4	5	7	10
Nominal torque S5 a)		T_{2N}	[Nm]	400	490	500	470	310
Acceleration torque S5 b)		T_{2B}	[Nm]	520	650	650	650	500
Nominal input speed S5 c)		n_{1N}	[rpm]	1 500	1 900	2 100	2 500	2 600
Maximum input speed S5		n_{1max}	[rpm]	2 500	4 000	4 000	4 000	4 000
Nominal torque S1 a)		T_{2N}	[Nm]	–	260	260	260	130
Acceleration torque S1 b)		T_{2B}	[Nm]	–	370	370	370	220
Nominal input speed S1 c)		n_{1N}	[rpm]	–	900	1 000	1 200	1 200
Maximum input speed S1		n_{1max}	[rpm]	–	1 600	1 600	2 600	2 600
Emergency stop torque d)		T_{2not}	[Nm]	1 300	1 300	1 300	1 300	1 260
Efficiency		η	[%]	97				
Lifetime		L_h	[h]	> 20 000				
Weight		M	[kg]	17				
Angular backlash		j_t	[arcmin]	Precision **P 1** ≤ 1 / **P 3** ≤ 3 / **P 5** ≤ 5				
Tilting moment		M_{kmax}	[Nm]	1 400				
Torsionnal rigidity e)		C_{t2}	[Nm/arcmin]	180	195	193	164	128
Tilting rigidity e)		C_{t2}	[Nm/arcmin]	934				
Noise i)		L_{pA}	[dB(A)]	< 62				
Max. permitted housing temperature g)		T	[°C]	90				
Protection class				IP 65				
Direction of rotation				Same way input / output				
Max. axial force on output shaft f)		F_{amax}	[N]	7 600				
Color				Red, RAL 3003				
Inertia in kg.cm² h)	Ø19	J_1	[kgcm²]	16.069	9.704	7.173	5.003	3.881
	Ø24			16.389	10.024	7.493	5.323	4.201
	Ø32			22.249	15.884	13.353	11.183	10.061
	Ø35			22.839	16.474	13.943	11.773	10.651
	Ø38			23.309	16.944	14.413	12.243	11.121
	Ø42			23.639	17.274	14.743	12.573	11.451
	Ø48			27.619	21.254	18.723	16.553	15.431

a) Nominal output torque when operating at n_{1N}.
b) 1000 cycles per hour max.
c) Valid for an ambient temperature of 20°C and T_{2N}. At higher ambient temperatures, please reduce speed.
d) Valid 1000 times the gearbox life.
e) Valid for an input Ø of 38 mm in 1-stage and 24 mm in 2-stage.
f) Values for 300 rpm.
g) For other temperatures, please contact us. Nominal output torque when operating at n_{1N}.
h) Depending on the motor output shaft Ø.
i) With **i**=10 and n_{1N}=3000 rpm no load.

Rack

			Pinion 1 Q6	Q7	Q9	Pinion 2 Q6	Q7	Q9
Max acceleration force	F_{2B}	[N]	11 216	5 197	8 053	15 790	6 350	12 686
Max acceleration torque	T_{2B}	[Nm]	312	145	224	452	182	363
Precision			P1		P5	P1		P5
Feed force			High	Medium	Elevated	High	Medium	Elevated

Above values for rack and pinion take into consideration a number of load cycles: 1×10^6 for the rack; 1×10^7 for the pinion. Both in pulsating operation.

For proper sizing follow flowchart **calculate your ideal drive train** on pages 136 et seq.

More on the technical datasheets **your ideal drive train** on pages 120 et seq.

Input					Output
A	for motor shaft	L ≤ 54	Ød ≤ 32	result in **LA**	0
B	for motor shaft	54 < L ≤ 65	Ød ≤ 38	result in **LB**	
C	for motor shaft	65 < L ≤ 80	Ød ≤ 38	result in **LC**	

		1-stage	2-stage
LA	[mm]	156.5	189.5
LB	[mm]	208.5	200.5
LC	[mm]		220.5

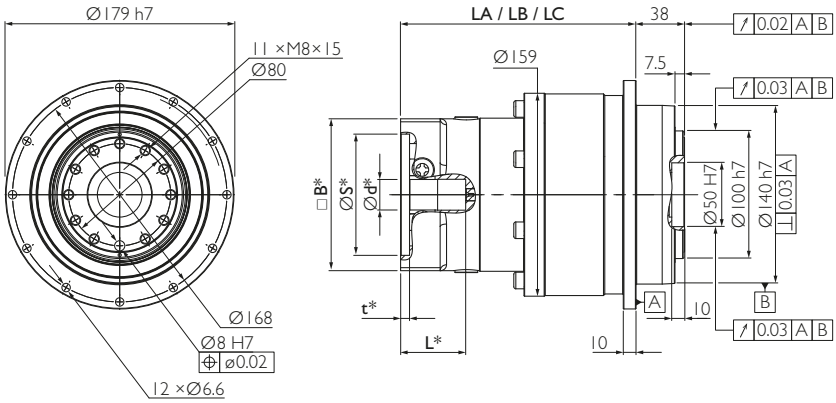

* depending on the motor. See pages 130 et seq.

Example NRHP 140 A0, 2-stage

Your ideal drive train

Function Package with gearbox, rack and pinion from Güdel

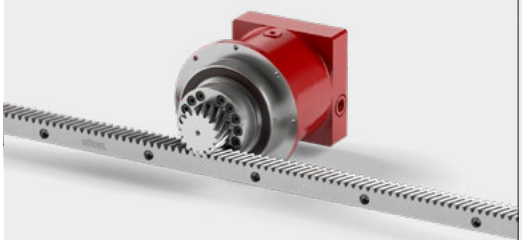

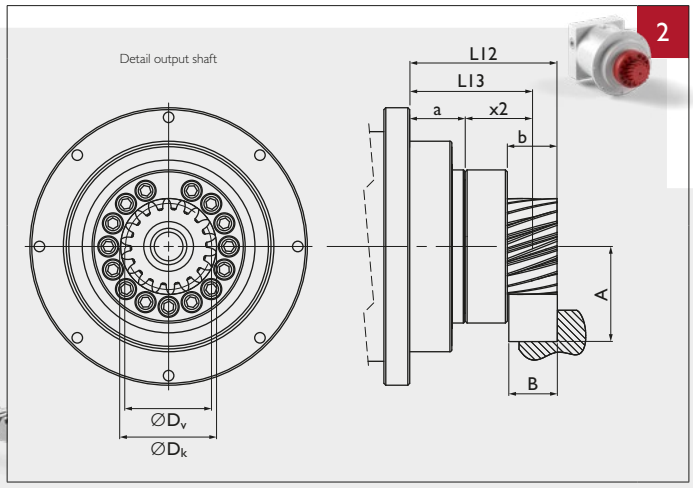

2

Material 16MnCr5 DIN 1.7131

Teeth pressure angle α = 20°, helical teeth left, 19°31'42", hardened (58^{+4}_{0} HRC), ground, crowned

Quality 6f24 DIN 3962 / 63 / 67

Pinion

		m_n	P_t	z	A	b	D_k	D_0	D_v	L12	L13	x2	a	M
Pinion 1	[-]	2.5	8.33	21	49.352	26	60.70	55.704	55.704	89.0	76.0	38.0	38	1.9
Pinion 2	[-]	3	10.00	18	54.648	32	63.30	57.296	57.296	95.0	79.0	41.0	38	2.0

m_n: Normal module, P_t: Transverse pitch [mm], z: Number of teeth, D_0: Pitch circle diameter for calculation, D_v: Pitch circle diameter for design, M: Weight [kg]

Available ratios *		i		2-stage									
				12	16	20	25	30	35	40	50	70	100
Nominal torque S5 a)		T_{2N}	[Nm]	400	490	500	500	400	500	490	500	470	310
Acceleration torque S5 b)		T_{2B}	[Nm]	520	650	650	650	600	650	650	650	650	500
Nominal input speed S5 c)		n_{1N}	[rpm]	2 900	2 900	2 900	3 000	3 000	3 000	3 000	3 300	3 300	4 000
Maximum input speed S5		n_{1max}	[rpm]	4 200	4 200	4 200	5 000	5 000	5 000	5 000	5 000	5 000	5 000
Nominal torque S1 a)		T_{2N}	[Nm]	260	260	260	260	260	260	260	260	260	150
Acceleration torque S1 b)		T_{2B}	[Nm]	370	370	370	370	370	370	370	370	370	220
Nominal input speed S1 c)		n_{1N}	[rpm]	1 400	1 400	1 800	1 800	2 000	2 000	2 000	2 000	2 200	2 200
Maximum input speed S1		n_{1max}	[rpm]	2 700	2 900	2 800	2 800	2 800	2 800	2 800	3 000	3 000	3 200
Emergency stop torque d)		T_{2not}	[Nm]	1 300	1 300	1 300	1 300	1 300	1 300	1 300	1 300	1 300	1 260
Efficiency		η	[%]	94									
Lifetime		L_h	[h]	> 20 000									
Weight		M	[kg]	20									
Angular backlash		j_t	[arcmin]	Precision **P 1** ≤ 1 / **P 3** ≤ 3 / **P 5** ≤ 5									
Tilting moment		M_{kmax}	[Nm]	1 400									
Torsionnal rigidity e)		C_{t2}	[Nm/arcmin]	170	185	185	183	160	183	177	178	147	117
Tilting rigidity e)		C_{t2}	[Nm/arcmin]	934									
Noise i)		L_{pA}	[dB(A)]	< 62									
Max. permitted housing temperature g)		T	[°C]	90									
Protection class				IP 65									
Direction of rotation				Same way input / output									
Max. axial force on output shaft f)		F_{amax}	[N]	7 600									
Color				Red, RAL 3003									
Inertia in kg.cm² h)	Ø14	J_1	[kgcm²]	3.556	3.158	3	2.457	1.869	2.014	1.805	1.78	1.758	1.747
	Ø19			4.316	3.918	3.76	3.217	2.629	2.774	2.565	2.54	2.518	2.507
	Ø24			4.636	4.238	4.08	3.537	2.949	3.094	2.885	2.86	2.838	2.827
	Ø32			5.676	5.278	5.12	4.577	3.989	4.134	3.925	3.9	3.878	3.867
	Ø35			11.806	11.408	11.25	10.707	10.119	10.264	10.055	10.03	10.008	9.997
	Ø38			11.776	11.378	11.22	10.677	10.089	10.234	10.025	10	9.978	9.967

* Other ratios available. 9, 15, 21, 27, 28, 49 on request.
a) Nominal output torque when operating at n_{1N}.
b) 1000 cycles per hour max.
c) Valid for an ambient temperature of 20°C and T_{2N}. At higher ambient temperatures, please reduce speed.
d) Valid 1000 times the gearbox life.
e) Valid for an input Ø of 24 mm in 1-stage and 19 mm in 2-stage.
f) Values for 300 rpm.
g) For other temperatures, please contact us. Nominal output torque when operating at n_{1N}.
h) Depending on the motor output shaft Ø.
i) With i=10 and n_{1N}=3000 rpm no load.

Rack

			Pinion 1			Pinion 2		
			Q6	Q7	Q9	Q6	Q7	Q9
Max acceleration force	F_{2B}	[N]	11 216	5 197	8 053	15 790	6 350	12 686
Max acceleration torque	T_{2B}	[Nm]	312	145	224	452	182	363
Precision			P1		P5	P1		P5
Feed force			High	Medium	Elevated	High	Medium	Elevated

Above values for rack and pinion take into consideration a number of load cycles: 1×10^6 for the rack; 1×10^7 for the pinion. Both in pulsating operation.

For proper sizing follow flowchart **calculate your ideal drive train** on pages 136 et seq.

More on the technical datasheets **your ideal drive train** on pages 120 et seq.

Input

A	for motor shaft	L ≤ 50	Ød ≤ 19	result in **LA**
B	for motor shaft	50 < L ≤ 55	Ød ≤ 24	result in **LB**
C	for motor shaft	55 < L ≤ 60	Ød ≤ 24	result in **LC**

		1-stage	2-stage
LA	[mm]	108	145
LB	[mm]	116	153
LC	[mm]	121	158

Output

2

GAdjustment

gudel.com/gadjustment

Manual

gudel.com/manual/planetary-gearbox

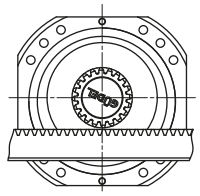

disengaged

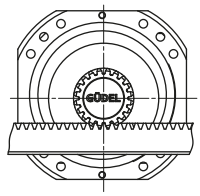

adjusted

The drawings show the two positions for assembling and operating.

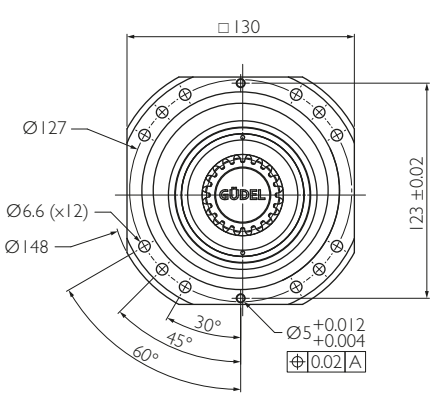

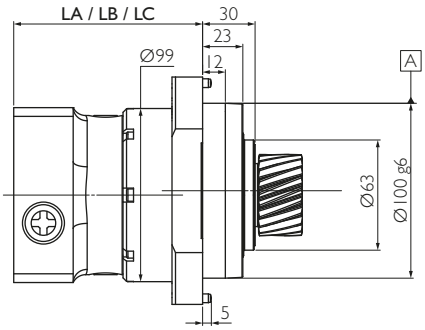

Example NGHP 080 A2, 1-stage

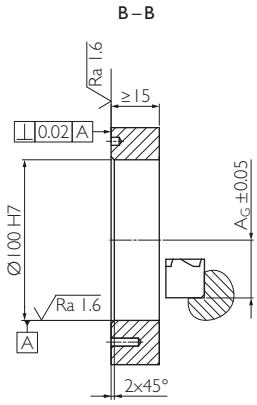

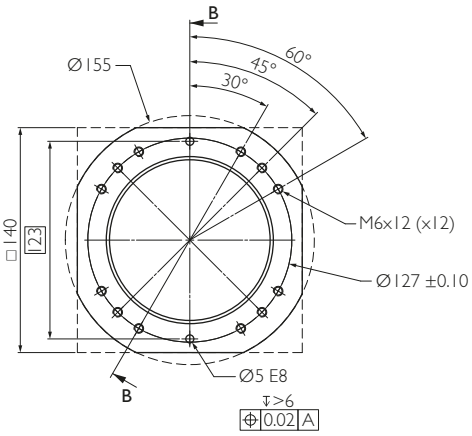

Customer interface

Your ideal drive train

Function Package with gearbox, rack and pinion from Güdel

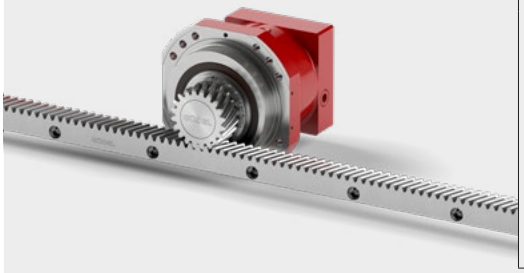

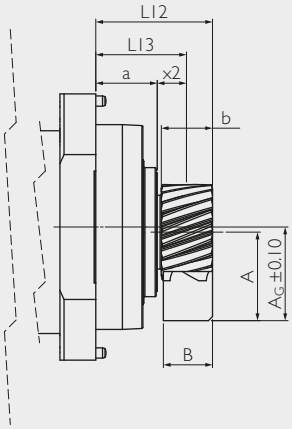

Detail output shaft

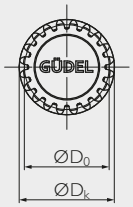

Material	16MnCr5 DIN 1.7131
Teeth	pressure angle α = 20°, helical teeth left, 19°31'42", hardened (58 +4 0 HRC), ground, crowned
Quality	6f24 DIN 3962 / 63 / 67

Pinion

		m_n	P_t	z	A	A_G	b	D_k	D_0	D_v	L12	L13	x2	a	M
Pinion 1	[-]	2	6.66	20	43.221	45.721	25	46.44	42.441	42.441	57.0	44.5	14.5	30	0.3
Pinion 2	[-]	2.5	8.33	16	43.471	45.971	25	48.94	42.441	43.941	57.0	44.5	14.5	30	0.3

m_n: Normal module, P_t: Transverse pitch [mm], z: Number of teeth, A_G: Gearbox position, D_0: Pitch circle diameter for calculation, D_v: Pitch circle diameter for design, M: Weight [kg]

Available ratios		i		1-stage 3	4	5	7	10
Nominal torque S5 a)		T_{2N}	[Nm]	65	75	76	76	60
Acceleration torque S5 b)		T_{2B}	[Nm]	85	110	110	110	90
Nominal input speed S5 c)		n_{1N}	[rpm]	2 300	2 300	2 900	3 100	3 100
Maximum input speed S5		n_{1max}	[rpm]	4 000	5 000	6 000	6 000	6 000
Nominal torque S1 a)		T_{2N}	[Nm]	–	50	50	50	35
Acceleration torque S1 b)		T_{2B}	[Nm]	–	72	72	72	44
Nominal input speed S1 c)		n_{1N}	[rpm]	–	2 000	2 000	2 200	2 200
Maximum input speed S1		n_{1max}	[rpm]	–	2 900	2 900	3 100	3 100
Emergency stop torque d)		T_{2not}	[Nm]	250	250	250	250	200
Efficiency		η	[%]	97				
Lifetime		L_h	[h]	> 20 000				
Weight		M	[kg]	4.9				
Angular backlash		j_t	[arcmin]	Precision **P 1** ≤ 1 / **P 3** ≤ 3 / **P 5** ≤ 5				
Tilting moment		M_{kmax}	[Nm]	348				
Torsionnal rigidity e)		C_{t2}	[Nm/arcmin]	32	38	40	36	28
Tilting rigidity e)		C_{t2}	[Nm/arcmin]	252				
Noise i)		L_{pA}	[dB(A)]	< 62				
Max. permitted housing temperature g)		T	[°C]	90				
Protection class				IP 65				
Direction of rotation				Same way input / output				
Max. axial force on output shaft f)		F_{amax}	[N]	2 300				
Color				Red, RAL 3003				
Inertia in kg.cm² h)	Ø11	J_1	[kgcm²]	1.897	1.327	1.083	0.871	0.759
	Ø14			1.887	1.317	1.073	0.861	0.749
	Ø19			2.65	2.08	1.836	1.624	1.512
	Ø24			2.978	2.408	2.164	1.952	1.84

a) Nominal output torque when operating at n_{1N}.
b) 1000 cycles per hour max.
c) Valid for an ambient temperature of 20°C and T_{2N}. At higher ambient temperatures, please reduce speed.
d) Valid 1000 times the gearbox life.
e) Valid for an Input Ø of 19 mm in 1-stage and 14 mm in 2-stage.
f) Values for 300 rpm / 20000 h.
g) For other temperatures, please contact us. Nominal output torque when operating at n_{1N}.
h) Depending on the motor output shaft Ø.
i) With **i**=10 and n_{1N}=3000 rpm no load.

Rack

			Pinion 1 Q6	Q7	Q9	Pinion 2 Q6	Q7	Q9
Max acceleration force	F_{2B}	[N]	7 075	1 760	4 752	10 570	2 813	7620
Max acceleration torque	T_{2B}	[Nm]	120	30	81	224	60	162
Precision			P1		P5	P1		P5
Feed force			High	Medium	Elevated	High	Medium	Elevated

Above values for rack and pinion take into consideration a number of load cycles: 1×10^6 for the rack; 1×10^7 for the pinion. Both in pulsating operation.

For proper sizing follow flowchart **calculate your ideal drive train** on pages 136 et seq.

More on the technical datasheets **your ideal drive train** on pages 120 et seq.

Input

A	for motor shaft	L ≤ 50	Ød ≤ 19	result in **LA**
B	for motor shaft	50 < L ≤ 55	Ød ≤ 24	result in **LB**
C	for motor shaft	55 < L ≤ 60	Ød ≤ 24	result in **LC**

		1-stage	2-stage
LA	[mm]	108	145
LB	[mm]	116	153
LC	[mm]	121	158

Output

2

GAdjustment

gudel.com/gadjustment

Manual

gudel.com/manual/planetary-gearbox

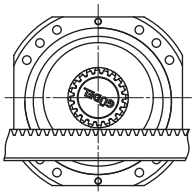

disengaged

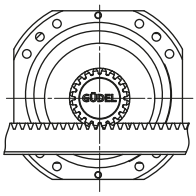

adjusted

The drawings show the two positions for assembling and operating.

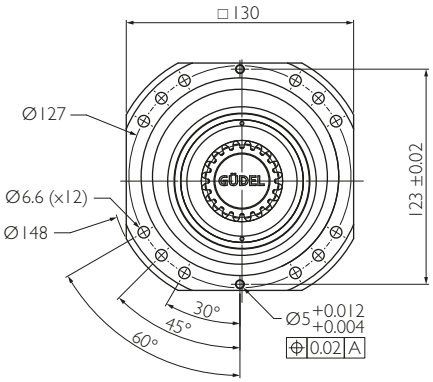

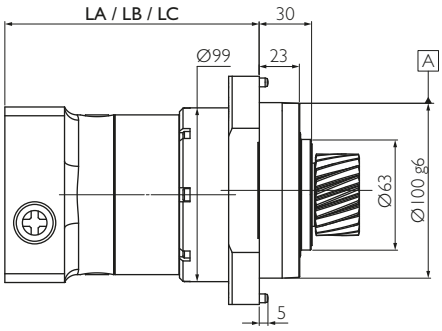

Example NGHP 080 A2, 1-stage

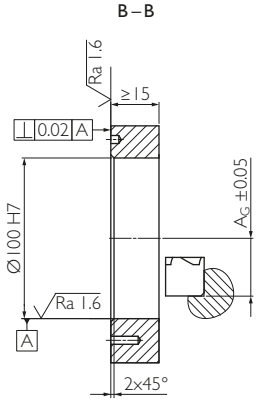

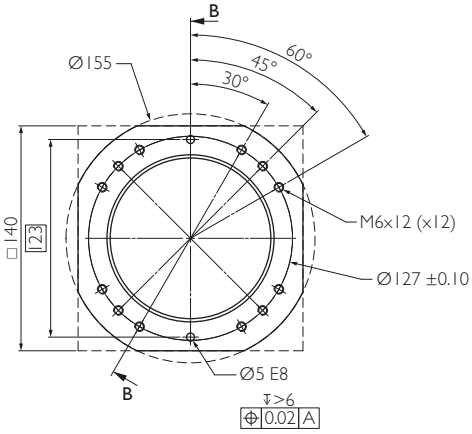

Customer interface

Your ideal drive train

Function Package with gearbox, rack and pinion from Güdel

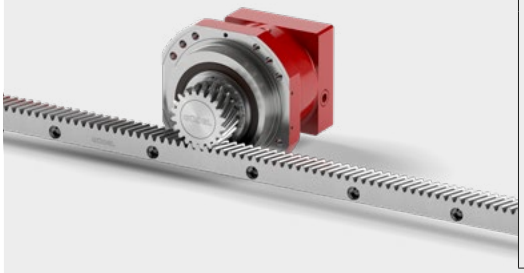

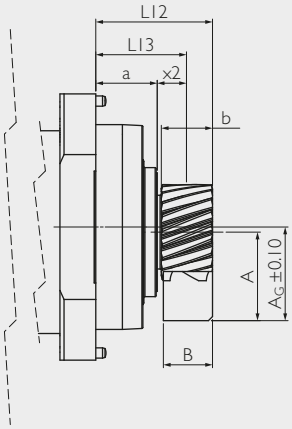

Detail output shaft

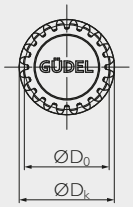

Material	16MnCr5 DIN 1.7131
Teeth	pressure angle α = 20°, helical teeth left, 19°31'42", hardened (58^{+4}_{0} HRC), ground, crowned
Quality	6f24 DIN 3962 / 63 / 67

Pinion

		m_n	P_t	z	A	A_G	b	D_k	D_0	D_v	L12	L13	x2	a	M
Pinion 1	[-]	2	6.66	20	43.221	45.721	25	46.44	42.441	42.441	57.0	44.5	14.5	30	0.3
Pinion 2	[-]	2.5	8.33	16	43.471	45.971	25	48.94	42.441	43.941	57.0	44.5	14.5	30	0.3

m_n: Normal module, P_t: Transverse pitch [mm], z: Number of teeth, A_G: Gearbox position, D_0: Pitch circle diameter for calculation, D_v: Pitch circle diameter for design, M: Weight [kg]

Available ratios *		i		2-stage									
				12	16	20	25	30	35	40	50	70	100
Nominal torque S5 a)		T_{2N}	[Nm]	75	90	90	90	75	90	90	90	90	60
Acceleration torque S5 b)		T_{2B}	[Nm]	85	110	110	110	90	110	110	110	110	90
Nominal input speed S5 c)		n_{1N}	[rpm]	3 600	3 600	3 600	3 600	3 600	3 500	3 500	3 800	4 500	4 500
Maximum input speed S5		n_{1max}	[rpm]	6 000	6 000	6 000	6 000	6 000	6 000	6 000	6 000	6 000	6 000
Nominal torque S1 a)		T_{2N}	[Nm]	50	50	50	50	40	50	50	50	50	35
Acceleration torque S1 b)		T_{2B}	[Nm]	72	72	72	72	72	72	72	72	72	47
Nominal input speed S1 c)		n_{1N}	[rpm]	2 300	2 500	2 500	2 500	2 500	2 500	2 500	3 000	2 800	3 100
Maximum input speed S1		n_{1max}	[rpm]	3 300	3 500	3 500	3 500	3 500	3 500	3 500	3 800	4 000	4 500
Emergency stop torque d)		T_{2not}	[Nm]	250	250	250	250	250	250	250	250	250	200
Efficiency		η	[%]	94									
Lifetime		L_h	[h]	> 20 000									
Weight		M	[kg]	6.5									
Angular backlash		j_t	[arcmin]	Precision **P 1** ≤ 1 / **P 3** ≤ 3 / **P 5** ≤ 5									
Tilting moment		M_{kmax}	[Nm]	348									
Torsionnal rigidity e)		C_{t2}	[Nm/arcmin]	32	38	38	39	32	39	35	36	34	27
Tilting rigidity e)		C_{t2}	[Nm/arcmin]	252									
Noise i)		L_{pA}	[dB(A)]	< 62									
Max. permitted housing temperature g)		T	[°C]	90									
Protection class				IP 65									
Direction of rotation				Same way input / output									
Max. axial force on output shaft f)		F_{amax}	[N]	2 300									
Color				Red, RAL 3003									
Inertia in kg.cm² h)	Ø11	J_1	[kgcm²]	0.937	0.937	0.886	0.8	0.693	0.727	0.688	0.685	0.683	0.6559
	Ø14			0.927	0.927	0.876	0.79	0.683	0.717	0.678	0.675	0.673	0.6459
	Ø19			1.69	1.69	1.639	1.553	1.446	1.48	1.441	1.438	1.436	1.4089
	Ø24			2.018	2.018	1.967	1.881	1.774	1.808	1.769	1.766	1.764	1.7369

* Other ratios available. 9, 15, 21, 27, 28, 49 on request.
a) Nominal output torque when operating at n_{1N}.
b) 1000 cycles per hour max.
c) Valid for an ambient temperature of 20°C and T_{2N}. At higher ambient temperatures, please reduce speed.
d) Valid 1000 times the gearbox life.
e) Valid for an Input Ø of 19 mm in 1-stage and 14 mm in 2-stage.
f) Values for 300 rpm / 20000 h.
g) For other temperatures, please contact us. Nominal output torque when operating at n_{1N}.
h) Depending on the motor output shaft Ø.
i) With **i**=10 and n_{1N}=3000 rpm no load.

Rack

			Pinion 1			Pinion 2		
			Q6	Q7	Q9	Q6	Q7	Q9
Max acceleration force	F_{2B}	[N]	7 075	1 760	4 752	10 570	2 813	7620
Max acceleration torque	T_{2B}	[Nm]	120	30	81	224	60	162
Precision			P1		P5	P1		P5
Feed force			High	Medium	Elevated	High	Medium	Elevated

Above values for rack and pinion take into consideration a number of load cycles: 1×10^6 for the rack; 1×10^7 for the pinion. Both in pulsating operation.

For proper sizing follow flowchart **calculate your ideal drive train** on pages 136 et seq.

More on the technical datasheets **your ideal drive train** on pages 120 et seq.

Input

A	for motor shaft	L ≤ 54	Ød ≤ 24	result in **LA**
B	for motor shaft	54 < L ≤ 65	Ød ≤ 38	result in **LB**
C	for motor shaft	65 < L ≤ 80	Ød ≤ 38	result in **LC**

		1-stage	2-stage
LA	[mm]	132.1	183.1
LB	[mm]	143.1	194.1
LC	[mm]	163.1	214.1

Output

2

GAdjustment

gudel.com/gadjustment

Manual

gudel.com/manual/planetary-gearbox

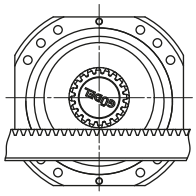

disengaged

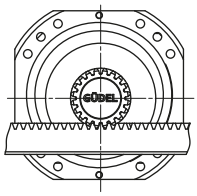

adjusted

The drawings show the two positions for assembling and operating.

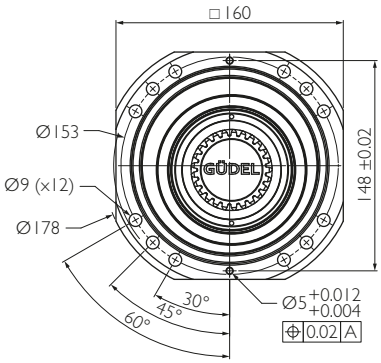

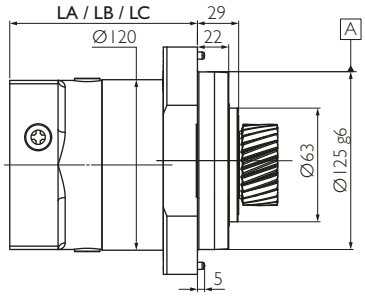

Example NGHP 080 A2, 1-stage

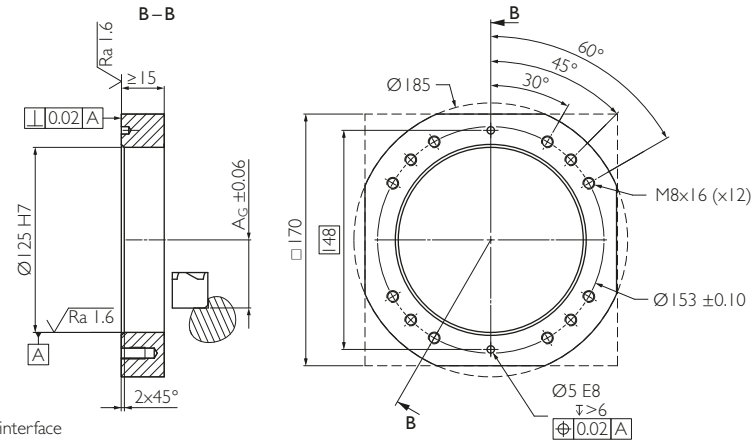

Customer interface

Your ideal drive train

Function Package with gearbox, rack and pinion from Güdel

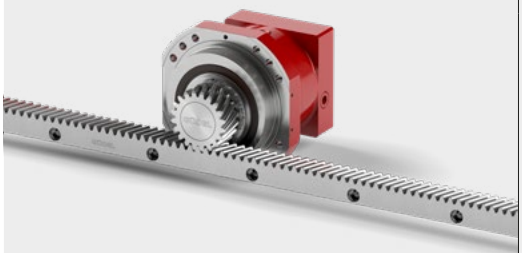

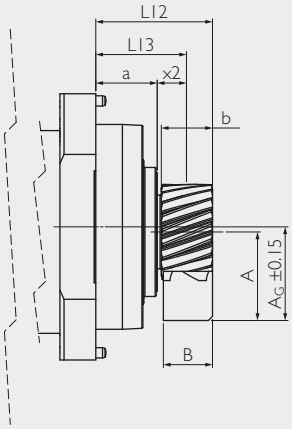

Detail output shaft

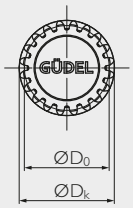

Material	16MnCr5 DIN 1.7131
Teeth	pressure angle α = 20°, helical teeth left, 19°31'42", hardened (58 +4 0 HRC), ground, crowned
Quality	6f24 DIN 3962 / 63 / 67

Pinion

		m_n	P_t	z	A	A_G	b	D_k	D_0	D_v	L12	L13	x2	a	M
Pinion 1	[-]	2	6.66	25	48.526	51.526	25	57.05	53.052	53.052	57.0	44.5	15.5	29	0.4
Pinion 2	[-]	3	10.00	20	57.831	60.831	30	69.66	63.662	63.662	62.0	47.0	18.0	29	0.7

m_n: Normal module, P_t: Transverse pitch [mm], z: Number of teeth, A_G: Gearbox position, D_0: Pitch circle diameter for calculation, D_v: Pitch circle diameter for design, M: Weight [kg]

Available ratios		i		1-stage				
				3	4	5	7	10
Nominal torque S5 a)		T_{2N}	[Nm]	200	260	270	250	150
Acceleration torque S5 b)		T_{2B}	[Nm]	320	350	350	330	265
Nominal input speed S5 c)		n_{1N}	[rpm]	1 300	2 300	2 600	2 600	2 600
Maximum input speed S5		n_{1max}	[rpm]	1 700	4 500	4 500	4 500	4 500
Nominal torque S1 a)		T_{2N}	[Nm]	–	175	175	175	115
Acceleration torque S1 b)		T_{2B}	[Nm]	–	250	250	250	190
Nominal input speed S1 c)		n_{1N}	[rpm]	–	1 500	1 600	1 800	1 800
Maximum input speed S1		n_{1max}	[rpm]	–	2 000	2 000	2 800	2 800
Emergency stop torque d)		T_{2not}	[Nm]	500	630	630	630	630
Efficiency		η	[%]	97				
Lifetime		L_h	[h]	> 20 000				
Weight		M	[kg]	9				
Angular backlash		j_t	[arcmin]	Precision **P 1** ≤ 1 / **P 3** ≤ 3 / **P 5** ≤ 5				
Tilting moment		M_{kmax}	[Nm]	614				
Torsionnal rigidity e)		C_{t2}	[Nm/arcmin]	78	82	88	78	64
Tilting rigidity e)		C_{t2}	[Nm/arcmin]	458				
Noise i)		L_{pA}	[dB(A)]	< 62				
Max. permitted housing temperature g)		T	[°C]	90				
Protection class				IP 65				
Direction of rotation				Same way input / output				
Max. axial force on output shaft f)		F_{amax}	[N]	4 800				
Color				Red, RAL 3003				
Inertia in kg.cm² h)	Ø11	J_1	[kgcm²]	6.134	3.95	3.072	2.337	1.948
	Ø14			6.114	3.93	3.052	2.317	1.928
	Ø19			6.874	4.69	3.812	3.077	2.688
	Ø24			7.194	5.01	4.132	3.397	3.008
	Ø32			8.234	6.05	5.172	4.437	4.048
	Ø35			14.364	12.18	11.302	10.567	10.178
	Ø38			14.334	12.15	11.272	10.537	10.148

a) Nominal output torque when operating at n_{1N}.
b) 1000 cycles per hour max.
c) Valid for an ambient temperature of 20°C and T_{2N}. At higher ambient temperatures, please reduce speed.
d) Valid 1000 times the gearbox life.
e) Valid for an input Ø of 24 mm in 1-stage and 19 mm in 2-stage.
f) Values for 300 rpm / 20000 h.
g) For other temperatures, please contact us. Nominal output torque when operating at n_{1N}.
h) Depending on the motor output shaft Ø.
i) With **i**=10 and n_{1N}=3000 rpm no load.

Rack

			Pinion 1			Pinion 2			Pinion 3			Pinion 4		
			Q6	Q7	Q9	Q6	Q7	Q9	Q6	Q7	Q9	Q6	Q7	Q9
Max acceleration force	F_{2B}	[N]	7 075	1 760	4 752	7 505	3 217	5 016	10 570	2 813	7 620	15 076	3 661	11 052
Max acceleration torque	T_{2B}	[Nm]	120	30	81	167	72	112	224	60	162	336	82	246
Precision			P1		P5	P1		P5	P1		P5	P1		P5
Feed force			High	Medium	Elevated	High	Medium	Elevated	High	Medium	Elevated	High	Medium	Elevated

Above values for rack and pinion take into consideration a number of load cycles: 1×10^6 for the rack; 1×10^7 for the pinion. Both in pulsating operation.

For proper sizing follow flowchart **calculate your ideal drive train** on pages 136 et seq.

More on the technical datasheets **your ideal drive train** on pages 120 et seq.

Input

A	for motor shaft	L ≤ 54	Ød ≤ 24	result in **LA**
B	for motor shaft	54 < L ≤ 65	Ød ≤ 38	result in **LB**
C	for motor shaft	65 < L ≤ 80	Ød ≤ 38	result in **LC**

		1-stage	2-stage
LA	[mm]	132.1	183.1
LB	[mm]	143.1	194.1
LC	[mm]	163.1	214.1

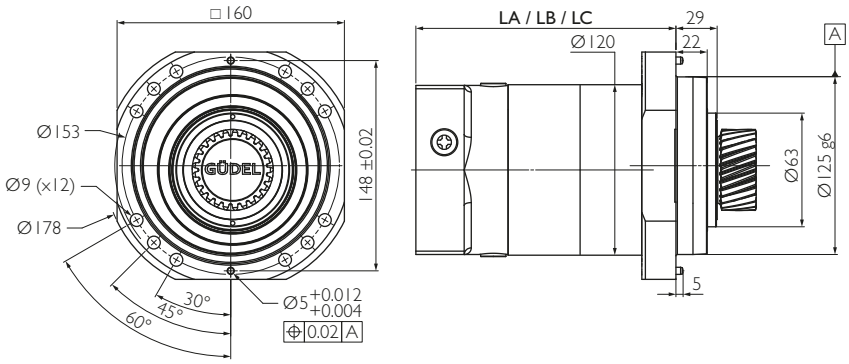

Output

2

GAdjustment

gudel.com/gadjustment

Manual

gudel.com/manual/planetary-gearbox

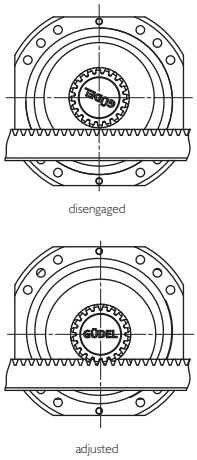

The drawings show the two positions for assembling and operating.

Example NGHP 080 A2, 1-stage

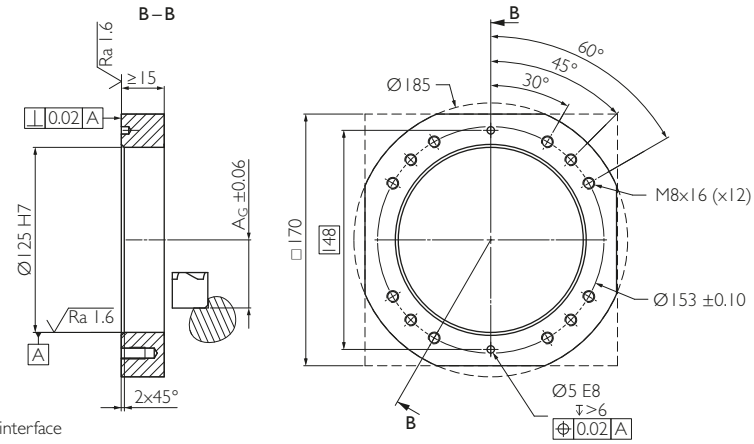

Customer interface

Your ideal drive train

Function Package with gearbox, rack and pinion from Güdel

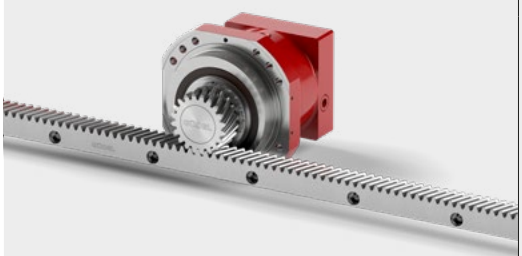

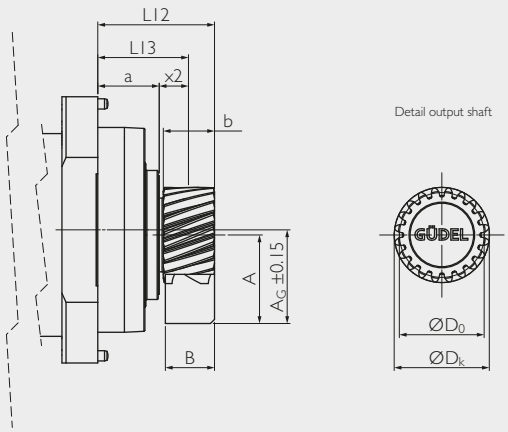

Detail output shaft

Material	16MnCr5 DIN 1.7131
Teeth	pressure angle α = 20°, helical teeth left, 19°31'42", hardened (58^{+4}_{0} HRC), ground, crowned
Quality	6f24 DIN 3962 / 63 / 67

Pinion

		m_n	P_t	z	A	A_G	b	D_k	D_0	D_v	L12	L13	x2	a	M
Pinion 1	[-]	2	6.66	25	48.526	51.526	25	57.05	53.052	53.052	57.0	44.5	15.5	29	0.4
Pinion 2	[-]	3	10.00	20	57.831	60.831	30	69.66	63.662	63.662	62.0	47.0	18.0	29	0.7

m_n: Normal module, P_t: Transverse pitch [mm], z: Number of teeth, A_G: Gearbox position, D_0: Pitch circle diameter for calculation, D_v: Pitch circle diameter for design, M: Weight [kg]

Available ratios *		i		2-stage									
				12	16	20	25	30	35	40	50	70	100
Nominal torque S5 a)		T_{2N}	[Nm]	200	260	270	270	200	270	260	270	250	150
Acceleration torque S5 b)		T_{2B}	[Nm]	320	350	350	350	320	350	350	320	330	265
Nominal input speed S5 c)		n_{1N}	[rpm]	2 400	2 900	2 900	2 900	2 900	2 900	2 900	3 200	3 600	4 300
Maximum input speed S5		n_{1max}	[rpm]	5 000	6 000	6 000	6 000	6 000	6 000	6 000	6 000	6 000	6 000
Nominal torque S1 a)		T_{2N}	[Nm]	175	175	175	175	175	175	175	175	175	115
Acceleration torque S1 b)		T_{2B}	[Nm]	250	250	250	250	250	250	250	250	250	190
Nominal input speed S1 c)		n_{1N}	[rpm]	2 000	2 000	2 000	2 000	2 000	2 000	2 000	2 000	2 000	2 500
Maximum input speed S1		n_{1max}	[rpm]	3 000	3 100	3 100	3 100	3 100	3 100	3 100	3 500	3 500	4 000
Emergency stop torque d)		T_{2not}	[Nm]	630	630	630	630	630	630	630	630	630	630
Efficiency		η	[%]	94									
Lifetime		L_h	[h]	> 20 000									
Weight		M	[kg]	12.5									
Angular backlash		j_t	[arcmin]	Precision **P 1** ≤ 1 / **P 3** ≤ 3 / **P 5** ≤ 5									
Tilting moment		M_{kmax}	[Nm]	614									
Torsionnal rigidity e)		C_{t2}	[Nm/arcmin]	78	81	87	87	87	87	81	87	77	64
Tilting rigidity e)		C_{t2}	[Nm/arcmin]	458									
Noise i)		L_{pA}	[dB(A)]	< 62									
Max. permitted housing temperature g)		T	[°C]	90									
Protection class				IP 65									
Direction of rotation				Same way input / output									
Max. axial force on output shaft f)		F_{amax}	[N]	4 800									
Color				Red, RAL 3003									
Inertia in kg.cm² h)	Ø11	J_1	[kgcm²]	3.033	2.896	2.841	2.363	1.802	1.976	1.78	1.771	1.764	1.76
	Ø14			3.013	2.876	2.821	2.343	1.782	1.956	1.76	1.751	1.744	1.74
	Ø19			3.773	3.636	3.581	3.103	2.542	2.716	2.52	2.511	2.504	2.5
	Ø24			4.093	3.956	3.901	3.423	2.862	3.036	2.84	2.831	2.824	2.82
	Ø32			5.133	4.996	4.941	4.463	3.902	4.076	3.88	3.871	3.864	3.86
	Ø35			11.263	11.126	11.071	10.593	10.032	10.206	10.01	10.001	9.994	9.99
	Ø38			11.233	11.096	11.041	10.563	10.002	10.176	9.98	9.971	9.964	9.96

* Other ratios available. 9, 15, 21, 27, 28, 49 on request.

a) Nominal output torque when operating at n_{1N}.

b) 1000 cycles per hour max.

c) Valid for an ambient temperature of 20°C and T_{2N}. At higher ambient temperatures, please reduce speed.

d) Valid 1000 times the gearbox life.

e) Valid for an input Ø of 24 mm in 1-stage and 19 mm in 2-stage.

f) Values for 300 rpm / 20000 h.

g) For other temperatures, please contact us. Nominal output torque when operating at n_{1N}.

h) Depending on the motor output shaft Ø.

i) With **i**=10 and n_{1N}=3000 rpm no load.

Rack

			Pinion 1			Pinion 2			Pinion 3			Pinion 4		
			Q6	Q7	Q9	Q6	Q7	Q9	Q6	Q7	Q9	Q6	Q7	Q9
Max acceleration force	F_{2B}	[N]	7 075	1 760	4 752	7 505	3 217	5 016	10 570	2 813	7 620	15 076	3 661	11 052
Max acceleration torque	T_{2B}	[Nm]	120	30	81	167	72	112	224	60	162	336	82	246
Precision			P1		P5	P1		P5	P1		P5	P1		P5
Feed force			High	Medium	Elevated	High	Medium	Elevated	High	Medium	Elevated	High	Medium	Elevated

Above values for rack and pinion take into consideration a number of load cycles: 1×10^6 for the rack; 1×10^7 for the pinion. Both in pulsating operation.

For proper sizing follow flowchart **calculate your ideal drive train** on pages 136 et seq.

More on the technical datasheets **your ideal drive train** on pages 120 et seq.

Input

A	for motor shaft	L ≤ 62	Ød ≤ 38	result in **LA**
B	for motor shaft	62 < L ≤ 115	Ød ≤ 48	result in **LB**

Output

2

GAdjustment — gudel.com/gadjustment

Manual — gudel.com/manual/planetary-gearbox

		1-stage	2-stage
LA	[mm]	156.5	189.5
LB	[mm]	208.5	200.5
LC	[mm]		220.5

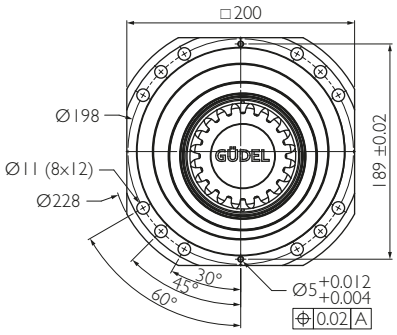

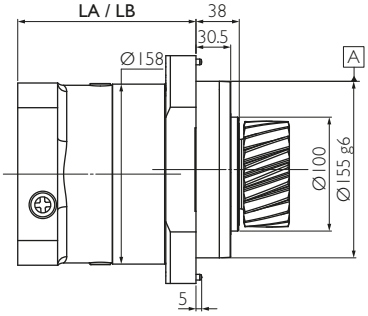

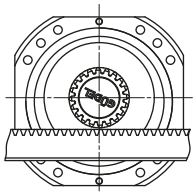

disengaged

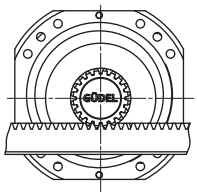

adjusted

The drawings show the two positions for assembling and operating.

Example NGHP 080 A2, 1-stage

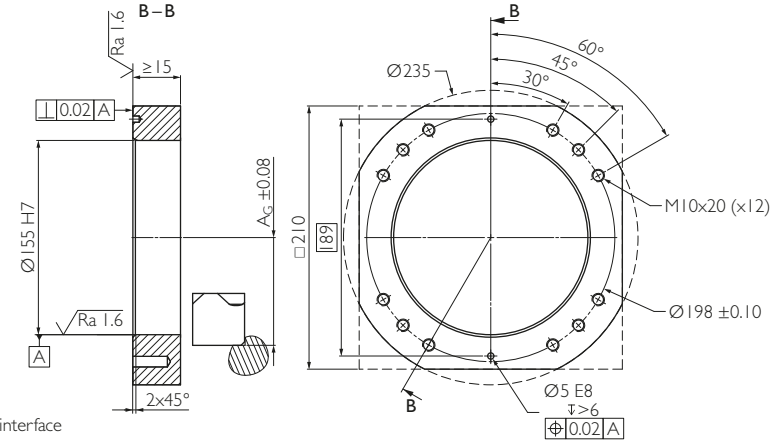

Customer interface

Your ideal drive train

Function Package with gearbox, rack and pinion from Güdel

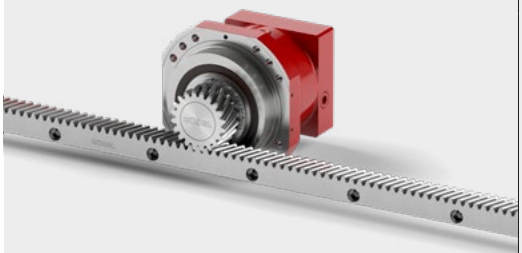

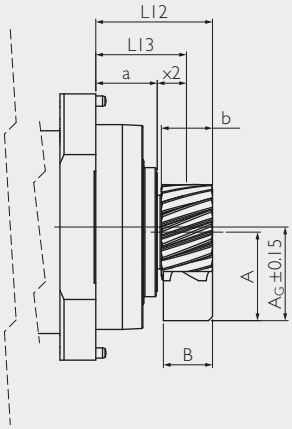

Detail output shaft

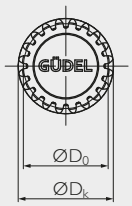

Material	16MnCr5 DIN 1.7131
Teeth	pressure angle α = 20°, helical teeth left, 19°31'42", hardened (58 +4 0 HRC), ground, crowned
Quality	6f24 DIN 3962 / 63 / 67

Pinion

		m_n	P_t	z	A	A_G	b	D_k	D_0	D_v	L12	L13	x2	a	M
Pinion 1	[-]	3	10.00	22	61.014	65.014	30	76.03	70.028	70.028	72.0	57.0	19.0	38	0.8
Pinion 2	[-]	4	13.33	20	77.441	81.441	40	92.88	84.883	84.883	82.0	62.0	24.0	38	1.6

m_n: Normal module, P_t: Transverse pitch [mm], z: Number of teeth, A_G: Gearbox position, D_0: Pitch circle diameter for calculation, D_v: Pitch circle diameter for design, M: Weight [kg]

Available ratios		i		1-stage 3	4	5	7	10
Nominal torque S5 a)		T_{2N}	[Nm]	400	490	500	470	310
Acceleration torque S5 b)		T_{2B}	[Nm]	520	650	650	650	500
Nominal input speed S5 c)		n_{1N}	[rpm]	1 500	1 900	2 100	2 500	2 600
Maximum input speed S5		n_{1max}	[rpm]	2 500	4 000	4 000	4 000	4 000
Nominal torque S1 a)		T_{2N}	[Nm]	–	260	260	260	130
Acceleration torque S1 b)		T_{2B}	[Nm]	–	370	370	370	220
Nominal input speed S1 c)		n_{1N}	[rpm]	–	900	1 000	1 200	1 200
Maximum input speed S1		n_{1max}	[rpm]	–	1 600	1 600	2 600	2 600
Emergency stop torque d)		T_{2not}	[Nm]	1 300	1 300	1 300	1 300	1 260
Efficiency		η	[%]	97				
Lifetime		L_h	[h]	> 20 000				
Weight		M	[kg]	17				
Angular backlash		j_t	[arcmin]	Precision **P 1** ≤ 1 / **P 3** ≤ 3 / **P 5** ≤ 5				
Tilting moment		M_{kmax}	[Nm]	1 400				
Torsionnal rigidity e)		C_{t2}	[Nm/arcmin]	180	195	193	164	128
Tilting rigidity e)		C_{t2}	[Nm/arcmin]	934				
Noise i)		L_{pA}	[dB(A)]	< 62				
Max. permitted housing temperature g)		T	[°C]	90				
Protection class				IP 65				
Direction of rotation				Same way input / output				
Max. axial force on output shaft f)		F_{amax}	[N]	7 600				
Color				Red, RAL 3003				
Inertia in kg.cm² h)	Ø19	J_1	[kgcm²]	16.069	9.704	7.173	5.003	3.881
	Ø24			16.389	10.024	7.493	5.323	4.201
	Ø32			22.249	15.884	13.353	11.183	10.061
	Ø35			22.839	16.474	13.943	11.773	10.651
	Ø38			23.309	16.944	14.413	12.243	11.121
	Ø42			23.639	17.274	14.743	12.573	11.451
	Ø48			27.619	21.254	18.723	16.553	15.431

a) Nominal output torque when operating at n_{1N}.
b) 1000 cycles per hour max.
c) Valid for an ambient temperature of 20°C and T_{2N}. At higher ambient temperatures, please reduce speed.
d) Valid 1000 times the gearbox life.
e) Valid for an input Ø of 38 mm in 1-stage and 24 mm in 2-stage.
f) Values for 300 rpm / 20000 h.
g) For other temperatures, please contact us. Nominal output torque when operating at n_{1N}.
h) Depending on the motor output shaft Ø.
i) With **i**=10 and n_{1N}=3000 rpm no load.

Rack

			Pinion 1			Pinion 2		
			Q6	Q7	Q9	Q6	Q7	Q9
Max acceleration force	F_{2B}	[N]	11 216	5 197	8 053	15 790	6 350	12 686
Max acceleration torque	T_{2B}	[Nm]	312	145	224	452	182	363
Precision			P1		P5	P1		P5
Feed force			High	Medium	Elevated	High	Medium	Elevated

Above values for rack and pinion take into consideration a number of load cycles: 1×10^6 for the rack; 1×10^7 for the pinion. Both in pulsating operation.

For proper sizing follow flowchart **calculate your ideal drive train** on pages 136 et seq.

More on the technical datasheets **your ideal drive train** on pages 120 et seq.

Input

A	for motor shaft	L ≤ 54	Ød ≤ 24	result in **LA**
B	for motor shaft	54 < L ≤ 65	Ød ≤ 38	result in **LB**
C	for motor shaft	65 < L ≤ 80	Ød ≤ 38	result in **LC**

Output

2

GAdjustment

gudel.com/gadjustment

Manual

gudel.com/manual/planetary-gearbox

		1-stage	2-stage
LA	[mm]	156.5	189.5
LB	[mm]	208.5	200.5
LC	[mm]		220.5

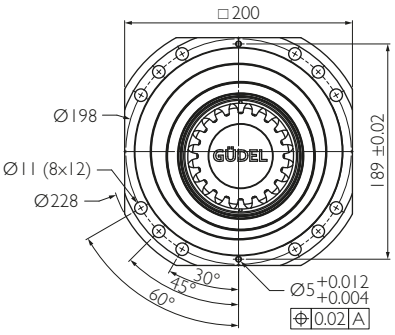

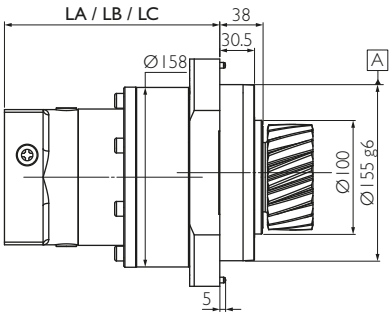

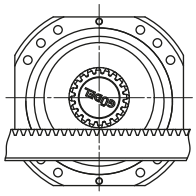

disengaged

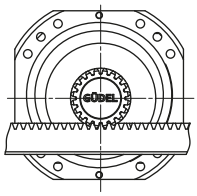

adjusted

The drawings show the two positions for assembling and operating.

Example NGHP 080 A2, 1-stage

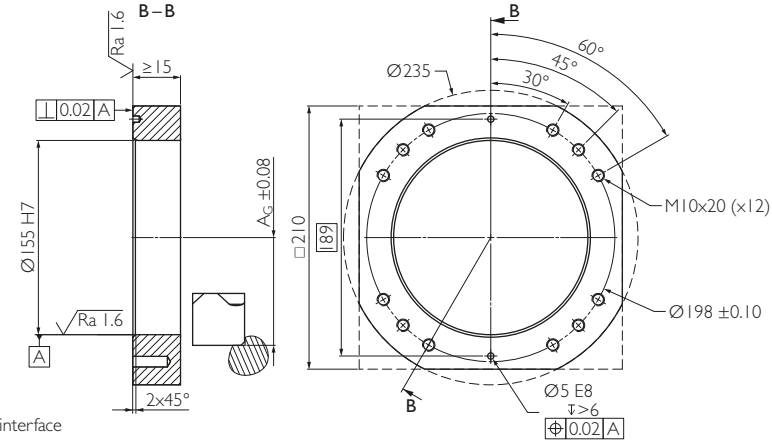

Customer interface

Your ideal drive train

Function Package with gearbox, rack and pinion from Güdel

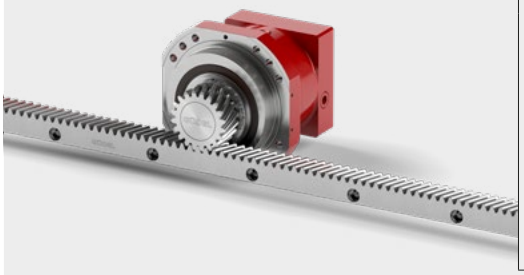

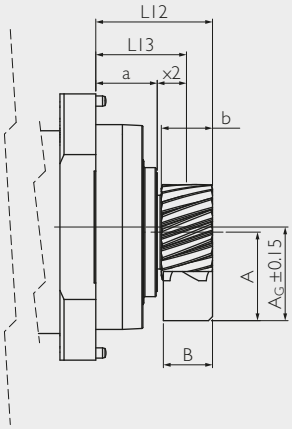

Detail output shaft

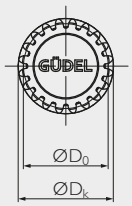

Material	16MnCr5 DIN 1.7131
Teeth	pressure angle α = 20°, helical teeth left, 19°31'42", hardened (58 +4 0 HRC), ground, crowned
Quality	6f24 DIN 3962 / 63 / 67

Pinion

		m_n	P_t	z	A	A_G	b	D_k	D_0	D_v	L12	L13	x2	a	M
Pinion 1	[-]	3	10.00	22	61.014	65.014	30	76.03	70.028	70.028	72.0	57.0	19.0	38	0.8
Pinion 2	[-]	4	13.33	20	77.441	81.441	40	92.88	84.883	84.883	82.0	62.0	24.0	38	1.6

m_n: Normal module, P_t: Transverse pitch [mm], z: Number of teeth, A_G: Gearbox position, D_0: Pitch circle diameter for calculation, D_v: Pitch circle diameter for design, M: Weight [kg]

Available ratios *		i		2-stage									
				12	16	20	25	30	35	40	50	70	100
Nominal torque S5 a)		T_{2N}	[Nm]	400	490	500	500	400	500	490	500	470	310
Acceleration torque S5 b)		T_{2B}	[Nm]	520	650	650	650	600	650	650	650	650	500
Nominal input speed S5 c)		n_{1N}	[rpm]	2 900	2 900	2 900	3 000	3 000	3 000	3 000	3 300	3 300	4 000
Maximum input speed S5		n_{1max}	[rpm]	4 200	4 200	4 200	5 000	5 000	5 000	5 000	5 000	5 000	5 000
Nominal torque S1 a)		T_{2N}	[Nm]	260	260	260	260	260	260	260	260	260	150
Acceleration torque S1 b)		T_{2B}	[Nm]	370	370	370	370	370	370	370	370	370	220
Nominal input speed S1 c)		n_{1N}	[rpm]	1 400	1 400	1 800	1 800	2 000	2 000	2 000	2 000	2 200	2 200
Maximum input speed S1		n_{1max}	[rpm]	2 700	2 900	2 800	2 800	2 800	2 800	2 800	3 000	3 000	3 200
Emergency stop torque d)		T_{2not}	[Nm]	1 300	1 300	1 300	1 300	1 300	1 300	1 300	1 300	1 300	1 260
Efficiency		η	[%]	94									
Lifetime		L_h	[h]	> 20 000									
Weight		M	[kg]	20									
Angular backlash		j_t	[arcmin]	Precision **P 1** ≤ 1 / **P 3** ≤ 3 / **P 5** ≤ 5									
Tilting moment		M_{kmax}	[Nm]	1 400									
Torsionnal rigidity e)		C_{t2}	[Nm/arcmin]	170	185	185	183	160	183	177	178	147	117
Tilting rigidity e)		C_{t2}	[Nm/arcmin]	934									
Noise i)		L_{pA}	[dB(A)]	< 62									
Max. permitted housing temperature g)		T	[°C]	90									
Protection class				IP 65									
Direction of rotation				Same way input / output									
Max. axial force on output shaft f)		F_{amax}	[N]	7 600									
Color				Red, RAL 3003									
Inertia in kg.cm² h)	Ø14	J_1	[kgcm²]	3.556	3.158	3	2.457	1.869	2.014	1.805	1.78	1.758	1.747
	Ø19			4.316	3.918	3.76	3.217	2.629	2.774	2.565	2.54	2.518	2.507
	Ø24			4.636	4.238	4.08	3.537	2.949	3.094	2.885	2.86	2.838	2.827
	Ø32			5.676	5.278	5.12	4.577	3.989	4.134	3.925	3.9	3.878	3.867
	Ø35			11.806	11.408	11.25	10.707	10.119	10.264	10.055	10.03	10.008	9.997
	Ø38			11.776	11.378	11.22	10.677	10.089	10.234	10.025	10	9.978	9.967

* Other ratios available. 9, 15, 21, 27, 28, 49 on request.
a) Nominal output torque when operating at n_{1N}.
b) 1000 cycles per hour max.
c) Valid for an ambient temperature of 20°C and T_{2N}. At higher ambient temperatures, please reduce speed.
d) Valid 1000 times the gearbox life.
e) Valid for an input Ø of 38 mm in 1-stage and 24 mm in 2-stage.
f) Values for 300 rpm / 20000 h.
g) For other temperatures, please contact us. Nominal output torque when operating at n_{1N}.
h) Depending on the motor output shaft Ø.
i) With **i**=10 and n_{1N}=3000 rpm no load.

Rack

			Pinion 1			Pinion 2		
			Q6	Q7	Q9	Q6	Q7	Q9
Max acceleration force	F_{2B}	[N]	11 216	5 197	8 053	15 790	6 350	12 686
Max acceleration torque	T_{2B}	[Nm]	312	145	224	452	182	363
Precision			P1		P5	P1		P5
Feed force			High	Medium	Elevated	High	Medium	Elevated

Above values for rack and pinion take into consideration a number of load cycles: 1×10^6 for the rack; 1×10^7 for the pinion. Both in pulsating operation.

For proper sizing follow flowchart **calculate your ideal drive train** on pages 136 et seq.

More on the technical datasheets **your ideal drive train** on pages 120 et seq.

Input

A	for motor shaft	L ≤ 60	19 ≤ Ød ≤ 32	result in LA
B	for motor shaft	60 < L ≤ 85	32 < Ød ≤ 48	result in LB
C	for motor shaft	85 < L ≤ 111	32 < Ød ≤ 48	result in LC

		1-stage	2-stage	3-stage
LA	[mm]	168	220	273
LB	[mm]	193	246	298
LC	[mm]	219	272	

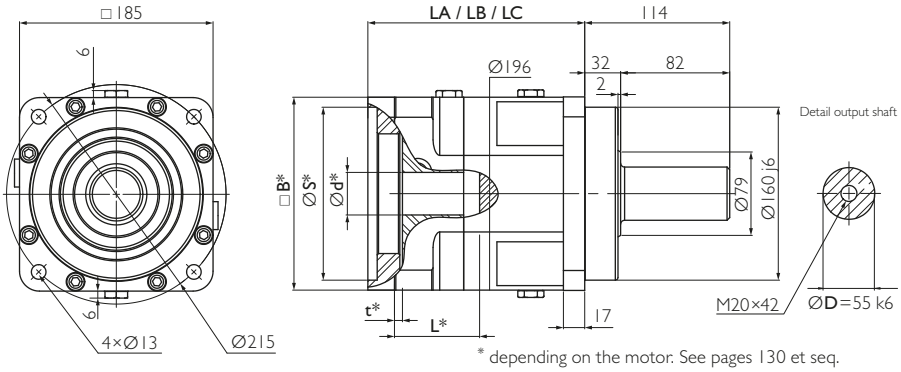

* depending on the motor. See pages 130 et seq.

Example NR 180 C0, 1-stage

Output

Standard

0

1

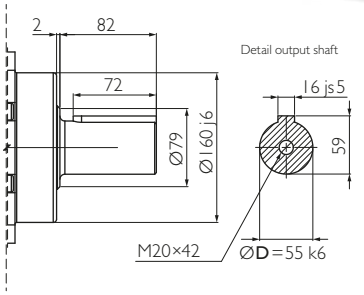

2

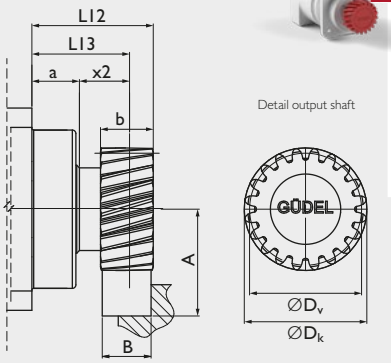

Optional

3

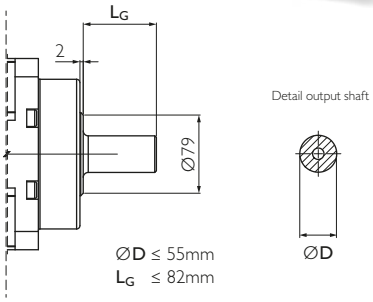

Option 3 on request. Adjustments can reduce capacity.

4

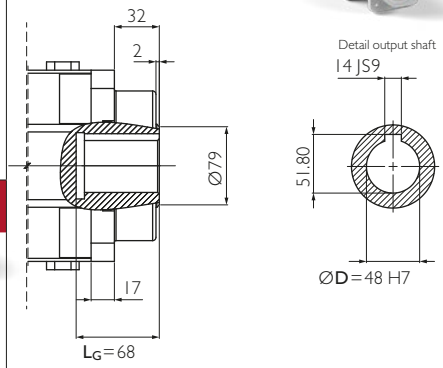

5

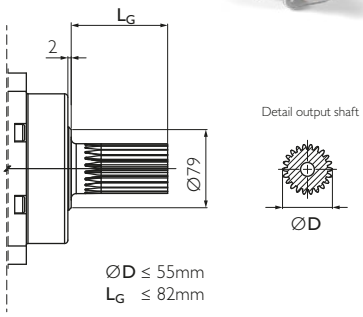

Option 5 on request. Adjustments can reduce capacity.

Your ideal drive train

Function Package with gearbox, rack and pinion from Güdel

Material	16MnCr5 DIN 1.7131
Teeth	pressure angle α = 20°, helical teeth left, 19°31'42" hardened (58$^{+4}_{0}$ HRC), ground, crowned
Quality	6f24 DIN 3962 / 63 / 67

Pinion

		m_n	P_t	z	A	b	D_k	D_0	D_v	L12	L13	x2	a	M
Pinion 1	[-]	4	13.33	20	77.441	40	92.88	84.883	84.883	83.5	63.5	31.5	32	1.5
Pinion 2	[-]	5	16.66	20	87.052	50	116.10	106.103	106.103	89.5	64.5	32.5	32	3.0

m_n: Normal module, P_t: Transverse pitch [mm], z: Number of teeth, D_0: Pitch circle diameter for calculation, D_v: Pitch circle diameter for design, M: Weight [kg]

Available ratios		i		1-stage				
				3	4	5	7	10
Nominal torque S5 [a]		T_{2N}	[Nm]	750	770	780	760	680
Acceleration torque S5 [b]		T_{2B}	[Nm]	1 150	1 150	1 150	1 150	880
Nominal input speed S5 [c]		n_{1N}	[rpm]	1 500	1 500	1 500	2 300	2 300
Maximum input speed S5		n_{1max}	[rpm]	3 000	3 500	3 500	3 500	3 500
Nominal torque S1 [a]		T_{2N}	[Nm]	380	380	380	380	340
Acceleration torque S1 [b]		T_{2B}	[Nm]	560	560	560	560	570
Nominal input speed S1 [c]		n_{1N}	[rpm]	1 100	1 300	1 300	2 100	2 100
Maximum input speed S1		n_{1max}	[rpm]	1 500	1 500	1 500	2 300	2 300
Emergency stop torque [d]		T_{2not}	[Nm]	2 550	2 780	2 780	2 780	2 250
Efficiency		η	[%]	97				
Lifetime		L_h	[h]	> 20 000				
Weight		M	[kg]	32				
Angular backlash		j_t	[arcmin]	Precision **P 1** ≤ 1 / **P 3** ≤ 3 / **P 5** ≤ 5 / **P 12** ≤12				
Torsionnal rigidity [e]		C_{t2}	[Nm/arcmin]	156.3	182.7	193.5	210.1	183.3
Noise [i]		L_{pA}	[dB(A)]	≤ 71				
Max. permitted housing temperature [g]		T	[°C]	90				
Protection class				IP 65				
Direction of rotation				Same way input / output				
Max. radial force on output shaft [f]		F_{rmax}	[N]	Center of output shaft: 15 500 / End of output shaft: 11 500				
Max. axial force on output shaft [f]		F_{amax}	[N]	15 000				
Color				Red, RAL 3003				
Inertia in kg.cm² [h]	Ø19	J_1	[kgcm²]	38.19	23.35	17.21	12.12	9.18
	Ø24			39.24	24.40	18.26	13.17	10.23
	Ø32			41.45	26.61	20.47	15.38	12.44
	Ø35			44.37	29.53	23.39	18.30	15.36
	Ø38			49.97	35.13	28.99	23.90	20.96
	Ø42			49.47	34.63	28.49	23.40	20.46
	Ø48			49.87	35.03	28.89	23.80	20.86

a) Nominal output torque when operating at n_{1N}.
b) 1000 cycles per hour max.
c) Valid for an ambient temperature of 20°C and T_{2N}. At higher ambient temperatures, please reduce speed.
d) Valid 1000 times the gearbox life.
e) Valid for an input Ø of 48 mm in 1-stage and 38 mm in 2- and 3-stage.
f) Values for 300 rpm.
g) For other temperatures, please contact us. Nominal output torque when operating at n_{1N}.
h) Depending on the motor output shaft Ø.
i) With i=10 and n_{1N}=3000 rpm no load.

Rack

			Pinion 1			Pinion 2		
			Q6	Q7	Q9	Q6	Q7	Q9
Max acceleration force	F_{2B}	[N]	28 585	14 084	24 045	44 505	23 785	40 048
Max acceleration torque	T_{2B}	[Nm]	1 213	598	1 021	2 361	1 262	2 125
Precision			P1		P12	P1		P12
Feed force			High	Medium	Elevated	High	Medium	Elevated

Above values for rack and pinion take into consideration a number of load cycles: 1×10^6 for the rack; 1×10^7 for the pinion. Both in pulsating operation.

For proper sizing follow flowchart **calculate your ideal drive train** on pages 136 et seq.

More on the technical datasheets **your ideal drive train** on pages 120 et seq.

Input

A	for motor shaft	L ≤ 60	19 ≤ Ød ≤ 32	result in **LA**
B	for motor shaft	60 < L ≤ 85	32 < Ød ≤ 48	result in **LB**
C	for motor shaft	85 < L ≤ 111	32 < Ød ≤ 48	result in **LC**

		1-stage	2-stage	3-stage
LA	[mm]	168	220	273
LB	[mm]	193	246	298
LC	[mm]	219	272	

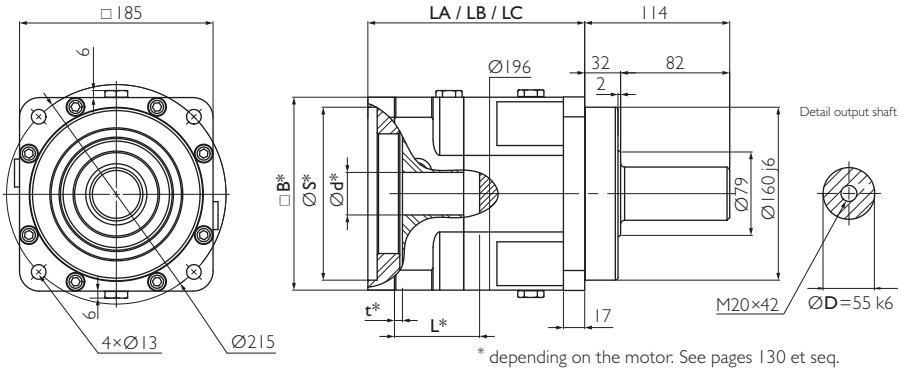

* depending on the motor. See pages 130 et seq.

Example NR 180 A5, 1-stage

Output

Standard

0

1

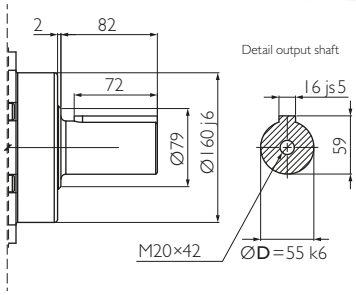

2

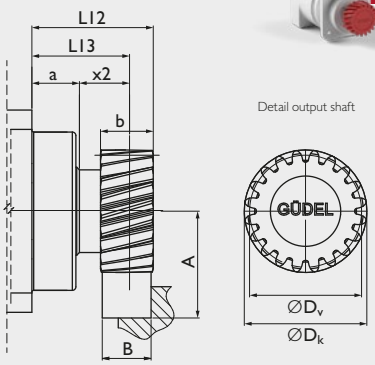

Optional

3

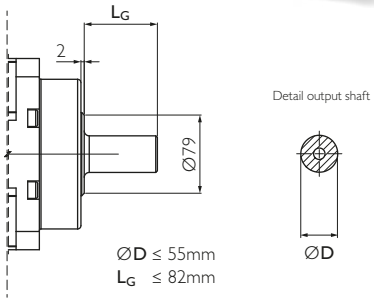

Option 3 on request. Adjustments can reduce capacity.

4

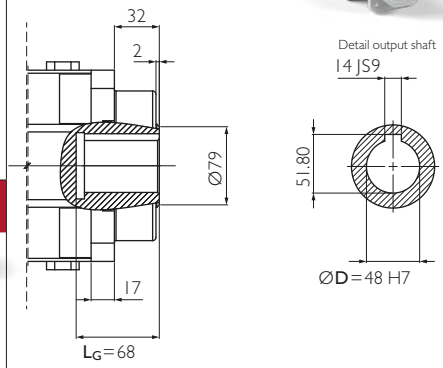

5

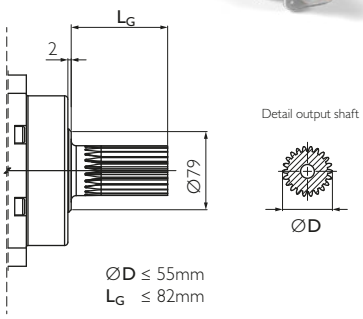

Option 5 on request. Adjustments can reduce capacity.

Your ideal drive train

Function Package with gearbox, rack and pinion from Güdel

Material	16MnCr5 DIN 1.7131
Teeth	pressure angle α = 20°, helical teeth left, 19°31'42" hardened (58$^{+4}_{0}$ HRC), ground, crowned
Quality	6f24 DIN 3962 / 63 / 67

Pinion

		m_n	P_t	z	A	b	D_k	D_0	D_v	L12	L13	x2	a	M
Pinion 1	[-]	4	13.33	20	77.441	40	92.88	84.883	84.883	83.5	63.5	31.5	32	1.5
Pinion 2	[-]	5	16.66	20	87.052	50	116.10	106.103	106.103	89.5	64.5	32.5	32	3.0

m_n: Normal module, P_t: Transverse pitch [mm], z: Number of teeth, D_0: Pitch circle diameter for calculation, D_v: Pitch circle diameter for design, M: Weight [kg]

Available ratios *		i		2-stage									
				12	16	20	25	30	35	40	50	70	100
Nominal torque S5 a)		T_{2N}	[Nm]	750	770	780	780	750	780	770	780	760	680
Acceleration torque S5 b)		T_{2B}	[Nm]	1 150	1 150	1 150	1 150	1 150	1 150	1 150	1 150	1 150	880
Nominal input speed S5 c)		n_{1N}	[rpm]	2 500	2 700	2 700	2 700	2 700	2 700	2 700	2 900	2 900	3 400
Maximum input speed S5		n_{1max}	[rpm]	3 800	3 800	3 800	3 800	3 800	3 800	3 800	3 800	3 800	3 800
Nominal torque S1 a)		T_{2N}	[Nm]	380	380	380	380	380	380	380	380	380	340
Acceleration torque S1 b)		T_{2B}	[Nm]	560	560	560	560	560	560	560	560	570	570
Nominal input speed S1 c)		n_{1N}	[rpm]	1 700	2 400	2 400	2 400	2 400	2 400	2 400	2 600	2 600	3 000
Maximum input speed S1		n_{1max}	[rpm]	2 500	2 700	2 700	2 700	2 700	2 700	2 700	2 900	2 900	3 400
Emergency stop torque d)		T_{2not}	[Nm]	2 780	2 780	2 780	2 780	2 550	2 780	2 780	2 780	2 780	2 250
Efficiency		η	[%]	94									
Lifetime		L_h	[h]	> 20 000									
Weight		M	[kg]	39									
Angular backlash		j_t	[arcmin]	Precision **P 1** ≤ 1 / **P 3** ≤ 3 / **P 5** ≤ 5 / **P 12** ≤12									
Torsionnal rigidity e)		C_{t2}	[Nm/arcmin]	140.6	164.4	174.0	174.0	140.6	174.0	164.4	174.0	189.2	165.0
Noise i)		L_{pA}	[dB(A)]	≤ 71									
Max. permitted housing temperature g)		T	[°C]	90									
Protection class				IP 65									
Direction of rotation				Same way input / output									
Max. radial force on output shaft f)		F_{rmax}	[N]	Center of output shaft: 15 500 / End of output shaft: 11 500									
Max. axial force on output shaft f)		F_{amax}	[N]	15 000									
Color				Red, RAL 3003									
Inertia in kg.cm² h)	Ø19	J_1	[kgcm²]	23.57	22.65	16.76	16.51	9.22	11.77	9.07	9.01	8.96	8.93
	Ø24			24.62	23.7	17.81	17.56	10.27	12.82	10.12	10.06	10.01	9.98
	Ø32			26.83	25.91	20.02	19.77	12.48	15.03	12.33	12.27	12.22	12.19
	Ø35			29.75	28.83	22.94	22.69	15.4	17.95	15.25	15.19	15.14	15.11
	Ø38			35.35	34.43	28.54	28.29	21	23.55	20.85	20.79	20.74	20.71
	Ø42			34.85	33.93	28.04	27.79	20.5	23.05	20.35	20.29	20.24	20.21
	Ø48			35.25	34.33	28.44	28.19	20.9	23.45	20.75	20.69	20.64	20.61

* Other ratios available. 9, 15, 21, 27, 28, 49 on request.
a) Nominal output torque when operating at n_{1N}.
b) 1000 cycles per hour max.
c) Valid for an ambient temperature of 20°C and T_{2N}. At higher ambient temperatures, please reduce speed.
d) Valid 1000 times the gearbox life.
e) Valid for an input Ø of 48 mm in 1-stage and 38 mm in 2- and 3-stage.
f) Values for 300 rpm.
g) For other temperatures, please contact us. Nominal output torque when operating at n_{1N}.
h) Depending on the motor output shaft Ø.
i) With i=10 and n_{1N}=3000 rpm no load.

Rack

			Pinion 1			Pinion 2		
			Q6	Q7	Q9	Q6	Q7	Q9
Max acceleration force	F_{2B}	[N]	28 585	14 084	24 045	44 505	23 785	40 048
Max acceleration torque	T_{2B}	[Nm]	1 213	598	1 021	2 361	1 262	2 125
Precision			P1		P12	P1		P12
Feed force			High	Medium	Elevated	High	Medium	Elevated

Above values for rack and pinion take into consideration a number of load cycles: 1×10^6 for the rack; 1×10^7 for the pinion. Both in pulsating operation.

For proper sizing follow flowchart **calculate your ideal drive train** on pages 136 et seq.

More on the technical datasheets **your ideal drive train** on pages 120 et seq.

Input

A	for motor shaft	L ≤ 60	19 ≤ Ød ≤ 32	result in **LA**
B	for motor shaft	60 < L ≤ 85	32 < Ød ≤ 48	result in **LB**
C	for motor shaft	85 < L ≤ 111	32 < Ød ≤ 48	result in **LC**

		1-stage	2-stage	3-stage
LA	[mm]	168	220	273
LB	[mm]	193	246	298
LC	[mm]	219	272	

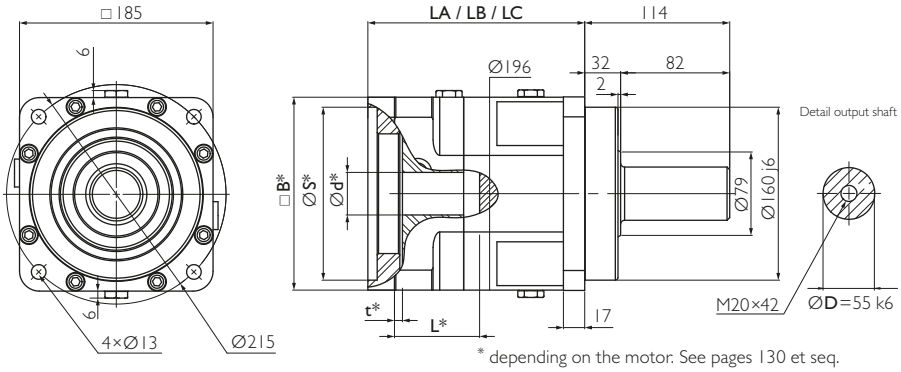

* depending on the motor. See pages 130 et seq.

Example NR 180 A0, 1-stage

Output

Standard

0

1

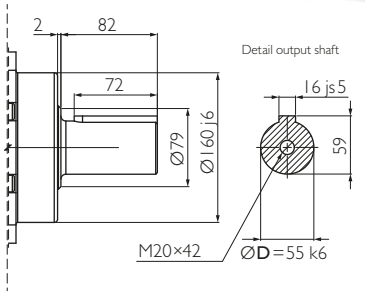

2

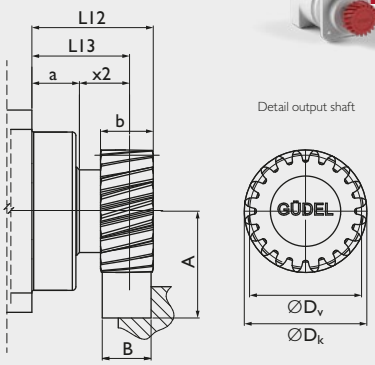

Optional

3

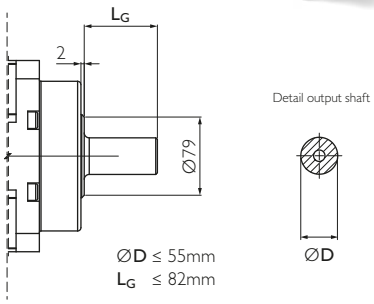

Option 3 on request. Adjustments can reduce capacity.

4

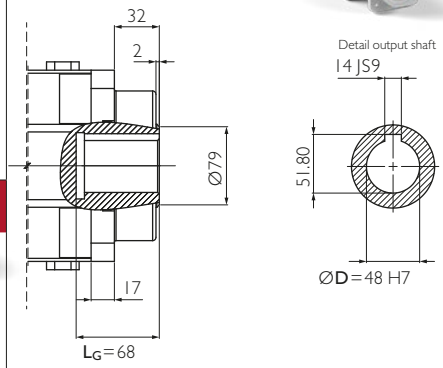

5

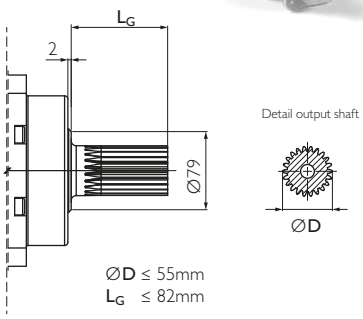

Option 5 on request. Adjustments can reduce capacity.

Your ideal drive train

Function Package with gearbox, rack and pinion from Güdel

Material	16MnCr5 DIN 1.7131
Teeth	pressure angle α = 20°, helical teeth left, 19°31'42" hardened (58$^{+4}_{0}$ HRC), ground, crowned
Quality	6f24 DIN 3962 / 63 / 67

Pinion

		m_n	P_t	z	A	b	D_k	D_0	D_v	L12	L13	x2	a	M
Pinion 1	[-]	4	13.33	20	77.441	40	92.88	84.883	84.883	83.5	63.5	31.5	32	1.5
Pinion 2	[-]	5	16.66	20	87.052	50	116.10	106.103	106.103	89.5	64.5	32.5	32	3.0

m_n: Normal module, P_t: Transverse pitch [mm], z: Number of teeth, D_0: Pitch circle diameter for calculation, D_v: Pitch circle diameter for design, M: Weight [kg]

Available ratios *		i		3-stage									
				105	125	175	200	250	300	400	500	700	1 000
Nominal torque S5 a)		T_{2N}	[Nm]	780	780	780	780	780	750	770	780	760	680
Acceleration torque S5 b)		T_{2B}	[Nm]	1 150	1 150	1 150	1 150	1 150	1 150	1 150	1 150	1 150	880
Nominal input speed S5 c)		n_{1N}	[rpm]	3 400	3 400	3 400	3 400	3 400	3 400	3 400	3 400	3 400	3 400
Maximum input speed S5		n_{1max}	[rpm]	4 000	4 000	4 000	4 000	4 000	4 000	4 000	4 000	4 000	4 000
Nominal torque S1 a)		T_{2N}	[Nm]	400	400	400	400	400	400	400	400	400	340
Acceleration torque S1 b)		T_{2B}	[Nm]	570	570	570	570	570	570	570	570	570	570
Nominal input speed S1 c)		n_{1N}	[rpm]	3 000	3 000	3 000	3 000	3 000	3 000	3 000	3 000	3 000	3 000
Maximum input speed S1		n_{1max}	[rpm]	3 400	3 400	3 400	3 400	3 400	3 400	3 400	3 400	3 400	3 400
Emergency stop torque d)		T_{2not}	[Nm]	2 780	2 780	2 780	2 780	2 780	2 550	2 780	2 780	2 780	2 250
Efficiency		η	[%]	91									
Lifetime		L_h	[h]	> 20 000									
Weight		M	[kg]	46									
Angular backlash		j_t	[arcmin]	Precision **P 1** ≤ 1 / **P 3** ≤ 3 / **P 5** ≤ 5 / **P 12** ≤12									
Torsionnal rigidity e)		C_{t2}	[Nm/arcmin]	165.3	165.3	165.5	133.3	165.3	133.3	156.3	165.3	179.5	156.6
Noise i)		L_{pA}	[dB(A)]	≤ 71									
Max. permitted housing temperature g)		T	[°C]	90									
Protection class				IP 65									
Direction of rotation				Same way input / output									
Max. radial force on output shaft f)		F_{rmax}	[N]	Center of output shaft: 15 500 / End of output shaft: 11 500									
Max. axial force on output shaft f)		F_{amax}	[N]	15 000									
Color				Red, RAL 3003									
Inertia in kg.cm² h)	Ø19	J_1	[kgcm²]	11.77	16.48	11.77	9.00	9.00	8.93	8.93	8.93	8.93	8.93
	Ø24			12.82	17.53	12.82	10.05	10.05	9.98	9.98	9.98	9.98	9.98
	Ø32			15.03	19.74	15.03	12.26	12.26	12.19	12.19	12.19	12.19	12.19
	Ø35			17.95	22.66	17.95	15.18	15.18	15.11	15.11	15.11	15.11	15.11
	Ø38			23.55	28.26	23.55	20.78	20.78	20.71	20.71	20.71	20.71	20.71
	Ø42			23.05	27.76	23.05	20.28	20.28	20.21	20.21	20.21	20.21	20.21
	Ø48			23.45	28.16	23.45	20.68	20.68	20.61	20.61	20.61	20.61	20.61

* Other ratios available. 112, 120, 140, 147, 150, 160, 196, 210, 245, 280, 343, 350, 490 on request.

a) Nominal output torque when operating at n_{1N}.

b) 1000 cycles per hour max.

c) Valid for an ambient temperature of 20°C and T_{2N}. At higher ambient temperatures, please reduce speed.

d) Valid 1000 times the gearbox life.

e) Valid for an input Ø of 48 mm in 1-stage and 38 mm in 2- and 3-stage.

f) Values for 300 rpm.

g) For other temperatures, please contact us. Nominal output torque when operating at n_{1N}.

h) Depending on the motor output shaft Ø.

i) With **i**=10 and n_{1N}=3000 rpm no load.

Rack

			Pinion 1			Pinion 2		
			Q6	Q7	Q9	Q6	Q7	Q9
Max acceleration force	F_{2B}	[N]	28 585	14 084	24 045	44 505	23 785	40 048
Max acceleration torque	T_{2B}	[Nm]	1 213	598	1 021	2 361	1 262	2 125
Precision			P1		P12	P1		P12
Feed force			High	Medium	Elevated	High	Medium	Elevated

Above values for rack and pinion take into consideration a number of load cycles: 1×10^6 for the rack; 1×10^7 for the pinion. Both in pulsating operation.

For proper sizing follow flowchart **calculate your ideal drive train** on pages 136 et seq.

More on the technical datasheets **your ideal drive train** on pages 120 et seq.

Input

A	for motor shaft	L ≤ 85	24≤ Ød ≤ 48	result in **LA**
B	for motor shaft	85 < L ≤115	48 < Ød ≤ 55	result in **LB**

		1-stage	2-stage	3-stage
LA	[mm]	229	300	371
LB	[mm]	259	330	

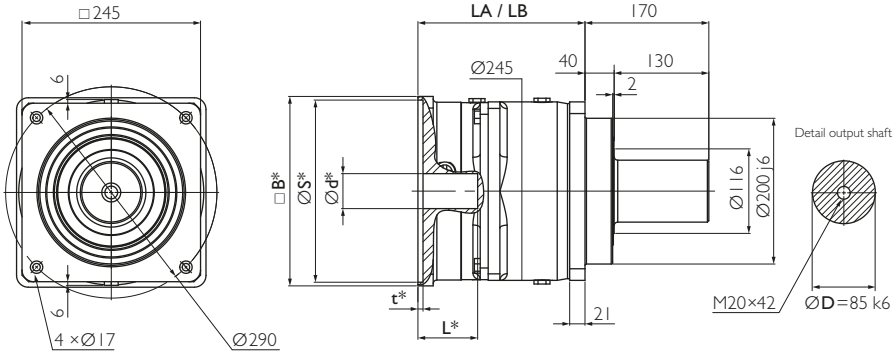

* depending on the motor. See pages 130 et seq.

Example NR 240 A0, 1-stage

Output

Standard

0

1

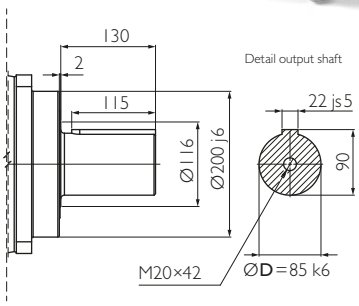

2

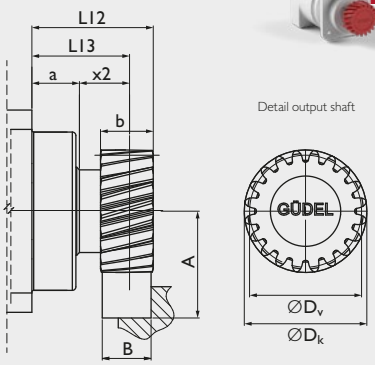

Optional

3

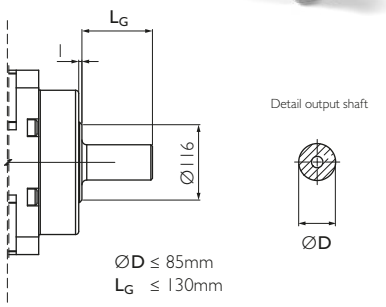

Option 3 on request. Adjustments can reduce capacity.

4

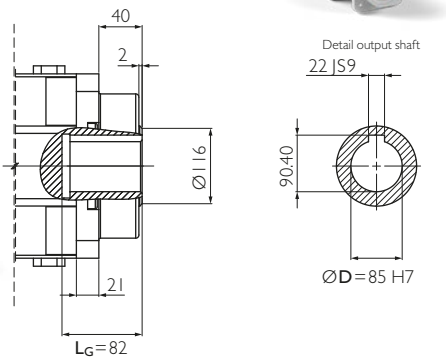

5

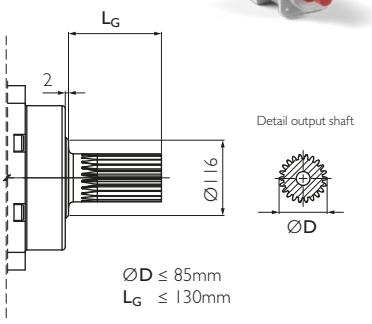

Option 5 on request. Adjustments can reduce capacity.

Your ideal drive train

Function Package with gearbox, rack and pinion from Güdel

Material	16MnCr5 DIN 1.7131
Teeth	pressure angle α = 20°, helical teeth left, 19°31'42" hardened (58$^{+4}_{0}$ HRC), ground, crowned
Quality	6f24 DIN 3962 / 63 / 67

Pinion

		m_n	P_t	z	A	b	D_k	D_0	D_v	L12	L13	x2	a	M
Pinion 1	[-]	5	16.66	24	97.662	50	137.32	127.324	127.324	112.5	87.5	47.5	40	5.4
Pinion 2	[-]	6	20.00	20	106.662	60	139.32	127.324	127.324	111.0	81.0	41.0	40	5.6

m_n: Normal module, P_t: Transverse pitch [mm], z: Number of teeth, D_0: Pitch circle diameter for calculation, D_v: Pitch circle diameter for design, M: Weight [kg]

Available ratios		i		1-stage				
				3	4	5	7	10
Nominal torque S5 [a]		T_{2N}	[Nm]	2 400	2 700	2 700	2 500	1 700
Acceleration torque S5 [b]		T_{2B}	[Nm]	3 400	3 800	3 800	3 600	2 400
Nominal input speed S5 [c]		n_{1N}	[rpm]	1 000	1 000	1 000	1 500	1 500
Maximum input speed S5		n_{1max}	[rpm]	2 000	2 200	2 200	2 200	2 200
Nominal torque S1 [a]		T_{2N}	[Nm]	1 400	1 600	1 600	1 600	1 600
Acceleration torque S1 [b]		T_{2B}	[Nm]	1 750	1 750	1 750	1 750	1 750
Nominal input speed S1 [c]		n_{1N}	[rpm]	700	900	900	1 350	1 350
Maximum input speed S1		n_{1max}	[rpm]	1 000	1 000	1 000	1 500	1 500
Emergency stop torque [d]		T_{2not}	[Nm]	6 900	8 500	8 500	8 500	6 800
Efficiency		η	[%]	97				
Lifetime		L_h	[h]	> 20 000				
Weight		M	[kg]	70				
Angular backlash		j_t	[arcmin]	Precision **P 1** ≤ 1 / **P 3** ≤ 3 / **P 5** ≤ 5 / **P 12** ≤12				
Torsionnal rigidity [e]		C_{t2}	[Nm/arcmin]	626	684	698	728	698
Noise [i]		L_{pA}	[dB(A)]	≤ 72				
Max. permitted housing temperature [g]		T	[°C]	90				
Protection class				IP 65				
Direction of rotation				Motor way				
Max. radial force on output shaft [f]		F_{rmax}	[N]	Center of output shaft: 30 000 / End of output shaft: 20 000				
Max. axial force on output shaft [f]		F_{amax}	[N]	34 000				
Color				Red, RAL 3003				
Inertia in kg.cm² [h]	Ø24	J_1	[kgcm²]	151.00	83.30	58.00	36.80	24.30
	Ø32			153.20	85.50	60.20	39.00	26.50
	Ø35			158.50	90.80	65.50	44.30	31.80
	Ø38			161.90	94.20	68.90	47.70	35.20
	Ø42			161.40	93.70	68.40	47.20	34.70
	Ø48			161.60	93.90	68.60	47.40	34.90
	Ø55			184.20	116.50	91.20	70.00	57.50

a) Nominal output torque when operating at n_{1N}.
b) 1000 cycles per hour max.
c) Valid for an ambient temperature of 20°C and T_{2N}. At higher ambient temperatures, please reduce speed.
d) Valid 1000 times the gearbox life.
e) Valid for an input Ø of 55 mm in 1-stage and 48 mm in 2- and 3-stage.
f) Values for 300 rpm.
g) For other temperatures, please contact us. Nominal output torque when operating at n_{1N}.
h) Depending on the motor output shaft Ø.
i) With **i**=10 and n_{1N}=2000 rpm no load.

Rack

			Pinion 1			Pinion 2		
			Q6	Q7	Q9	Q6	Q7	Q9
Max acceleration force	F_{2B}	[N]	44 786	29 748	39 992	63 300	-	59 005
Max acceleration torque	T_{2B}	[Nm]	2 851	1 894	2 546	4 030	-	3 756
Precision			P1		P12	P1		P12
Feed force			High	Medium	Elevated	High	Medium	Elevated

Above values for rack and pinion take into consideration a number of load cycles: 1×10^6 for the rack; 1×10^7 for the pinion. Both in pulsating operation.

For proper sizing follow flowchart **calculate your ideal drive train** on pages 136 et seq.

More on the technical datasheets **your ideal drive train** on pages 120 et seq.

Input

A	for motor shaft	L ≤ 85	24≤ Ød ≤ 48	result in **LA**
B	for motor shaft	85 < L ≤115	48 < Ød ≤ 55	result in **LB**

		1-stage	2-stage	3-stage
LA	[mm]	229	300	371
LB	[mm]	259	330	

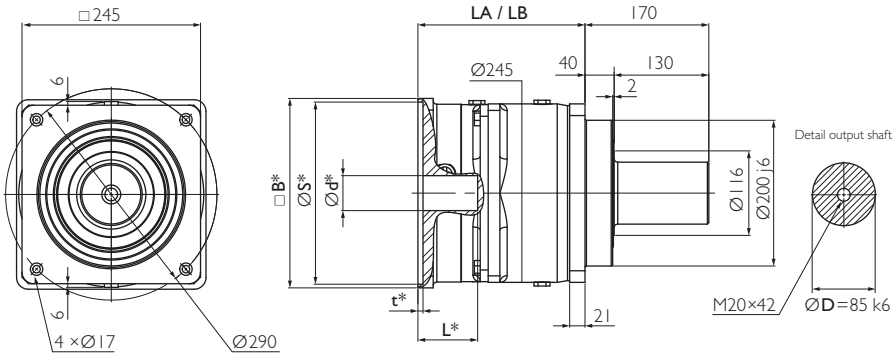

* depending on the motor. See pages 130 et seq.

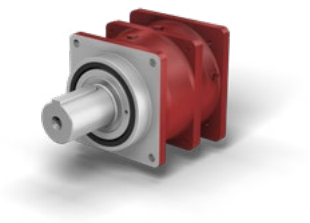

Example NR 240 A1, 1-stage

Output

Standard

0

1

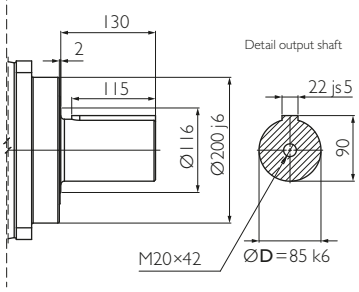

2

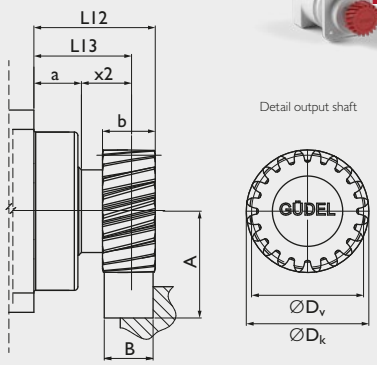

Optional

3

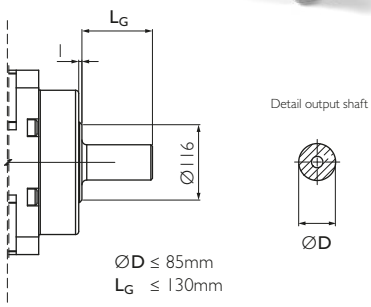

Option 3 on request. Adjustments can reduce capacity.

4

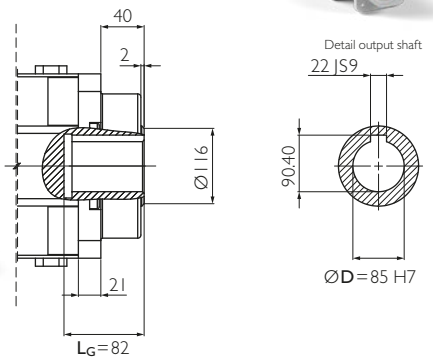

5

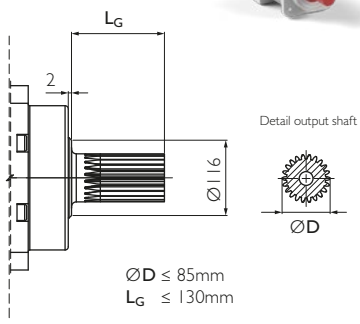

Option 5 on request. Adjustments can reduce capacity.

Your ideal drive train

Function Package with gearbox, rack and pinion from Güdel

Material	16MnCr5 DIN 1.7131
Teeth	pressure angle α = 20°, helical teeth left, 19°31'42" hardened (58$^{+4}_{0}$ HRC), ground, crowned
Quality	6f24 DIN 3962 / 63 / 67

Pinion

		m_n	P_t	z	A	b	D_k	D_0	D_v	L12	L13	x2	a	M
Pinion 1	[-]	5	16.66	24	97.662	50	137.32	127.324	127.324	112.5	87.5	47.5	40	5.4
Pinion 2	[-]	6	20.00	20	106.662	60	139.32	127.324	127.324	111.0	81.0	41.0	40	5.6

m_n: Normal module, P_t: Transverse pitch [mm], z: Number of teeth, D_0: Pitch circle diameter for calculation, D_v: Pitch circle diameter for design, M: Weight [kg]

Available ratios *		i		2-stage									
				12	16	20	25	30	35	40	50	70	100
Nominal torque S5 a)		T_{2N}	[Nm]	2 400	2 700	2 700	2 700	2 400	2 700	2 700	2 700	2 500	1 700
Acceleration torque S5 b)		T_{2B}	[Nm]	3 200	3 800	3 800	3 800	3 200	3 800	3 800	3 800	3 600	2 200
Nominal input speed S5 c)		n_{1N}	[rpm]	1 700	1 900	1 900	1 900	1 900	1 900	1 900	2 100	2 100	2 400
Maximum input speed S5		n_{1max}	[rpm]	3 500	3 500	3 500	3 500	3 500	3 500	3 500	3 500	3 500	3 500
Nominal torque S1 a)		T_{2N}	[Nm]	1 600	1 600	1 600	1 600	1 600	1 600	1 600	1 600	1 600	1 600
Acceleration torque S1 b)		T_{2B}	[Nm]	1 750	1 750	1 750	1 750	1 750	1 750	1 750	1 750	1 750	1 750
Nominal input speed S1 c)		n_{1N}	[rpm]	1 200	1 700	1 700	1 700	1 700	1 700	1 700	1 900	1 900	2 100
Maximum input speed S1		n_{1max}	[rpm]	1 700	1 900	1 900	1 900	1 900	1 900	1 900	2 100	2 100	2 400
Emergency stop torque d)		T_{2not}	[Nm]	6 900	8 500	8 500	8 500	6 900	8 500	8 500	8 500	8 500	6 800
Efficiency		η	[%]	94									
Lifetime		L_h	[h]	> 20 000									
Weight		M	[kg]	90									
Angular backlash		j_t	[arcmin]	Precision **P 1** ≤ 1 / **P 3** ≤ 3 / **P 5** ≤ 5 / **P 12** ≤12									
Torsionnal rigidity e)		C_{t2}	[Nm/arcmin]	564.5	582.0	599.5	599.5	564.5	599.5	582.0	599.5	587.8	564.5
Noise i)		L_{pA}	[dB(A)]	≤ 72									
Max. permitted housing temperature g)		T	[°C]	90									
Protection class				IP 65									
Direction of rotation				Same way input / output									
Max. radial force on output shaft f)		F_{rmax}	[N]	Center of output shaft: 30 000 / End of output shaft: 20 000									
Max. axial force on output shaft f)		F_{amax}	[N]	34 000									
Color				Red, RAL 3003									
Inertia in kg.cm² h)	Ø24	J_1	[kgcm²]	79.1	74.9	73.3	51.5	23.6	33.5	22.9	22.7	22.4	22.3
	Ø32			81.3	77.1	75.5	53.7	25.8	35.7	25.1	24.9	24.6	24.5
	Ø35			86.6	82.4	80.8	59	31.1	41	30.4	30.2	29.9	29.8
	Ø38			90	85.8	84.2	62.4	34.5	44.4	33.8	33.6	33.3	33.2
	Ø42			89.5	85.3	83.7	61.9	34	43.9	33.3	33.1	32.8	32.7
	Ø48			89.7	85.5	83.9	62.1	34.2	44.1	33.5	33.3	33	32.9
	Ø55			112.3	108.1	106.5	84.7	56.8	66.7	56.1	55.9	55.6	55.5

* Other ratios available. 9, 15, 21, 27, 28, 49 on request.
a) Nominal output torque when operating at n_{1N}.
b) 1000 cycles per hour max.
c) Valid for an ambient temperature of 20°C and T_{2N}. At higher ambient temperatures, please reduce speed.
d) Valid 1000 times the gearbox life.
e) Valid for an input Ø of 55 mm in 1-stage and 48 mm in 2- and 3-stage.
f) Values for 300 rpm.
g) For other temperatures, please contact us. Nominal output torque when operating at n_{1N}.
h) Depending on the motor output shaft Ø.
i) With i=10 and n_{1N}=2000 rpm no load.

Rack

			Pinion 1			Pinion 2		
			Q6	Q7	Q9	Q6	Q7	Q9
Max acceleration force	F_{2B}	[N]	44 786	29 748	39 992	63 300	-	59 005
Max acceleration torque	T_{2B}	[Nm]	2 851	1 894	2 546	4 030	-	3 756
Precision			P1		P12	P1		P12
Feed force			High	Medium	Elevated	High	Medium	Elevated

Above values for rack and pinion take into consideration a number of load cycles: 1×10^6 for the rack; 1×10^7 for the pinion. Both in pulsating operation.

For proper sizing follow flowchart **calculate your ideal drive train** on pages 136 et seq.

More on the technical datasheets **your ideal drive train** on pages 120 et seq.

Input

A	for motor shaft	L ≤ 85	24≤ Ød ≤ 48	result in **LA**
B	for motor shaft	85 < L ≤115	48 < Ød ≤ 55	result in **LB**

		1-stage	2-stage	3-stage
LA	[mm]	229	300	371
LB	[mm]	259	330	

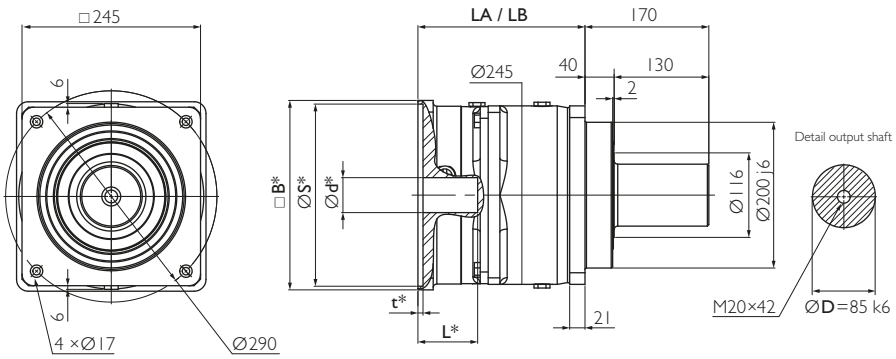

* depending on the motor. See pages 130 et seq.

Example NR 240 A2, 1-stage

Output

Standard

0

1

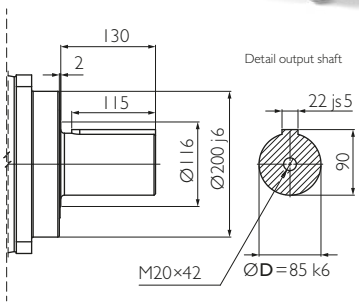

2

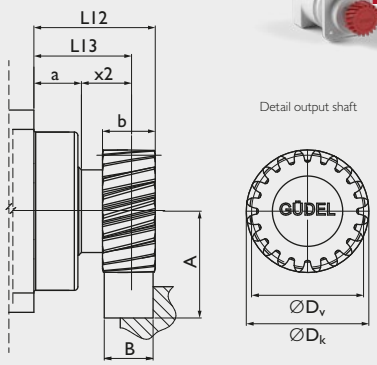

Optional

3

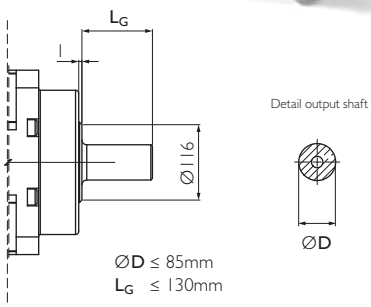

Option 3 on request. Adjustments can reduce capacity.

4

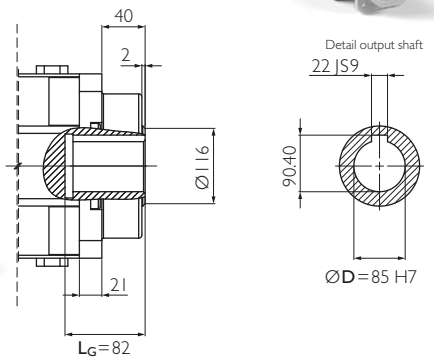

5

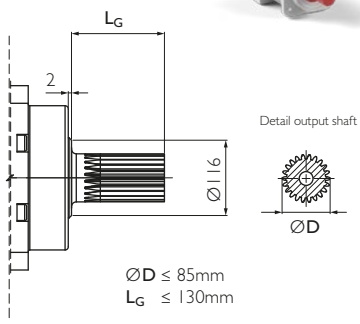

Option 5 on request. Adjustments can reduce capacity.

Your ideal drive train

Function Package with gearbox, rack and pinion from Güdel

Material	16MnCr5 DIN 1.7131
Teeth	pressure angle α = 20°, helical teeth left, 19°31'42" hardened (58$^{+4}_{0}$ HRC), ground, crowned
Quality	6f24 DIN 3962 / 63 / 67

Pinion

		m_n	P_t	z	A	b	D_k	D_0	D_v	L12	L13	x2	a	M
Pinion 1	[-]	5	16.66	24	97.662	50	137.32	127.324	127.324	112.5	87.5	47.5	40	5.4
Pinion 2	[-]	6	20.00	20	106.662	60	139.32	127.324	127.324	111.0	81.0	41.0	40	5.6

m_n: Normal module, P_t: Transverse pitch [mm], z: Number of teeth, D_0: Pitch circle diameter for calculation, D_v: Pitch circle diameter for design, M: Weight [kg]

Available ratios *		i		3-stage									
				105	125	175	200	250	300	400	500	700	1 000
Nominal torque S5 a)		T_{2N}	[Nm]	2 700	2 700	2 700	2 700	2 700	2 400	2 700	2 700	2 500	1 500
Acceleration torque S5 b)		T_{2B}	[Nm]	3 800	3 800	3 800	3 800	3 800	3 000	3 800	3 800	3 600	2 200
Nominal input speed S5 c)		n_{1N}	[rpm]	2 400	2 400	2 400	2 400	2 400	2 400	2 400	2 400	2 400	2 400
Maximum input speed S5		n_{1max}	[rpm]	3 500	3 500	3 500	3 500	3 500	3 500	3 500	3 500	3 500	3 500
Nominal torque S1 a)		T_{2N}	[Nm]	1 600	1 600	1 600	1 600	1 600	1 600	1 600	1 600	1 600	1 600
Acceleration torque S1 b)		T_{2B}	[Nm]	1 750	1 750	1 750	1 750	1 750	1 750	1 750	1 750	1 750	1 750
Nominal input speed S1 c)		n_{1N}	[rpm]	2 100	2 100	2 100	2 100	2 100	2 100	2 100	2 100	2 100	2 100
Maximum input speed S1		n_{1max}	[rpm]	2 400	2 400	2 400	2 400	2 400	2 400	2 400	2 400	2 400	2 400
Emergency stop torque d)		T_{2not}	[Nm]	8 500	8 500	8 500	8 500	8 500	6 900	8 500	8 500	8 500	6 800
Efficiency		η	[%]	91									
Lifetime		L_h	[h]	> 20 000									
Weight		M	[kg]	110									
Angular backlash		j_t	[arcmin]	Precision **P 1** ≤ 1 / **P 3** ≤ 3 / **P 5** ≤ 5 / **P 12** ≤12									
Torsionnal rigidity e)		C_{t2}	[Nm/arcmin]	538	538	538	538	538	506	524	538	556	524
Noise i)		L_{pA}	[dB(A)]	≤ 72									
Max. permitted housing temperature g)		T	[°C]	90									
Protection class				IP 65									
Direction of rotation				Same way input / output									
Max. radial force on output shaft f)		F_{rmax}	[N]	Center of output shaft: 30 000 / End of output shaft: 20 000									
Max. axial force on output shaft f)		F_{amax}	[N]	34 000									
Color				Red, RAL 3003									
Inertia in kg.cm² h)	Ø24	J_1	[kgcm²]	35.10	51.30	35.10	22.80	22.60	22.30	22.30	22.30	22.30	22.30
	Ø32			37.30	53.50	37.30	25.00	24.80	24.50	24.50	24.50	24.50	24.50
	Ø35			42.60	58.80	42.60	30.30	30.10	29.80	29.80	29.80	29.80	29.80
	Ø38			46.00	62.20	46.00	33.70	33.50	33.20	33.20	33.20	33.20	33.20
	Ø42			45.50	61.70	45.50	33.20	33.00	32.70	32.70	32.70	32.70	32.70
	Ø48			45.70	61.70	45.70	33.40	33.20	32.90	32.90	32.90	32.90	32.90
	Ø55			68.30	84.50	68.30	56.00	55.80	55.50	55.50	55.50	55.50	55.50

* Other ratios available. 112, 120, 140, 147, 150, 160, 196, 210, 245, 280, 343, 350, 490 on request.

a) Nominal output torque when operating at n_{1N}.

b) 1000 cycles per hour max.

c) Valid for an ambient temperature of 20°C and T_{2N}. At higher ambient temperatures, please reduce speed.

d) Valid 1000 times the gearbox life.

e) Valid for an input Ø of 55 mm in 1-stage and 48 mm in 2- and 3-stage.

f) Values for 300 rpm.

g) For other temperatures, please contact us. Nominal output torque when operating at n_{1N}.

h) Depending on the motor output shaft Ø.

i) With **i**=10 and n_{1N}=2000 rpm no load.

Rack

			Pinion 1			Pinion 2		
			Q6	Q7	Q9	Q6	Q7	Q9
Max acceleration force	F_{2B}	[N]	44 786	29 748	39 992	63 300	-	59 005
Max acceleration torque	T_{2B}	[Nm]	2 851	1 894	2 546	4 030	-	3 756
Precision			P1		P12	P1		P12
Feed force			High	Medium	Elevated	High	Medium	Elevated

Above values for rack and pinion take into consideration a number of load cycles: 1×10^6 for the rack; 1×10^7 for the pinion. Both in pulsating operation.

For proper sizing follow flowchart **calculate your ideal drive train** on pages 136 et seq.

More on the technical datasheets **your ideal drive train** on pages 120 et seq.

Input

A	for motor shaft	L ≤ 45	6 ≤ Ød ≤ 19	result in **LA**
B	for motor shaft	45 < L ≤ 55	19 < Ød ≤ 24	result in **LB**

		1-stage	2-stage	3-stage
LA	[mm]	106.5	128.5	150.5
LB	[mm]	116	138	160

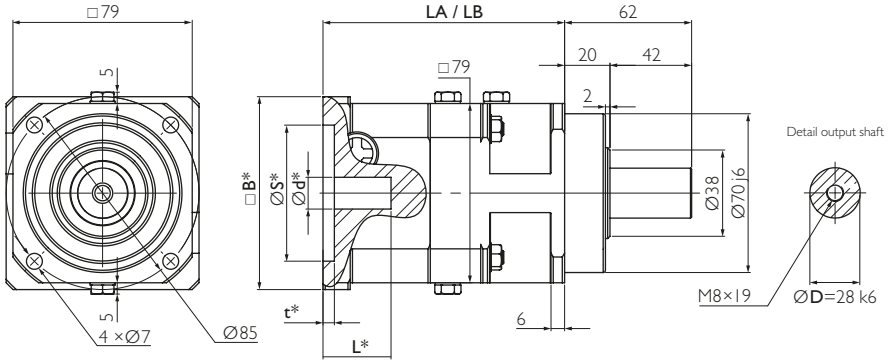

* depending on the motor. See pages 130 et seq.

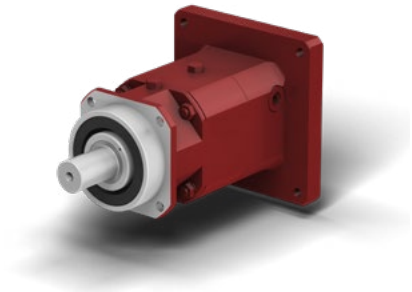

Example SR 080 B0, 2-stage

Output

Standard

0

1

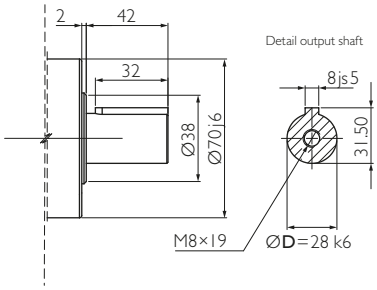

2

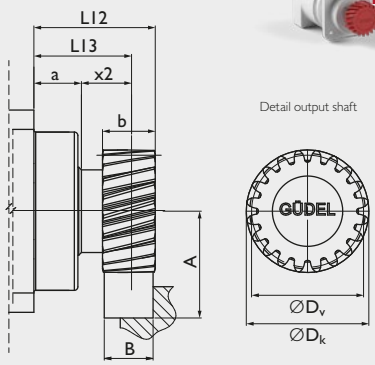

Optional

3

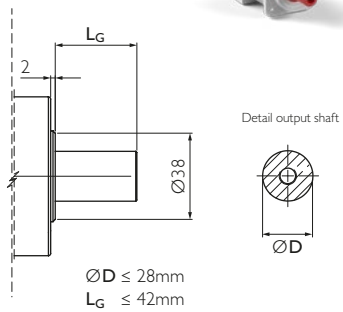

Option 3 on request. Adjustments can reduce capacity.

4

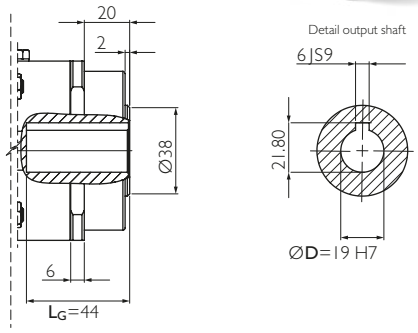

5

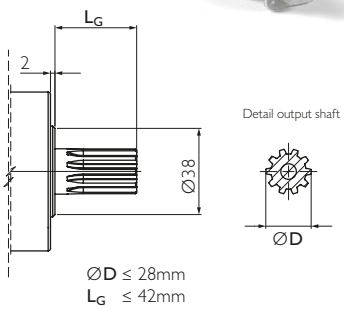

Option 5 on request. Adjustments can reduce capacity.

Your ideal drive train

Function Package with gearbox, rack and pinion from Güdel

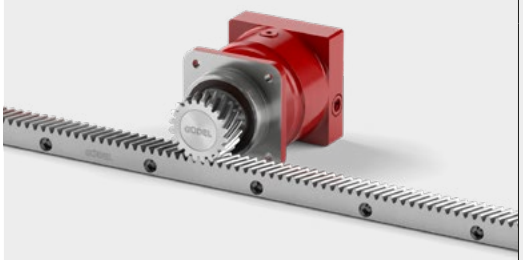

Material	16MnCr5 DIN 1.7131
Teeth	pressure angle α = 20°, helical teeth left, 19°31'42" hardened (58^{+4}_{0} HRC), ground, crowned
Quality	6f24 DIN 3962 / 63 / 67

Pinion

		m_n	P_t	z	A	b	D_k	D_0	D_v	L12	L13	x2	a	M
Pinion 1	[-]	2	6.66	20	43.221	25	46.44	42.441	42.441	52.5	40.0	20.0	20	0.3
Pinion 2	[-]	2.5	8.33	16	43.471	26	48.94	42.441	43.941	58	45	15	30	0.3

m_n: Normal module, P_t: Transverse pitch [mm], z: Number of teeth, D_0: Pitch circle diameter for calculation, D_v: Pitch circle diameter for design, M: Weight [kg]

Available ratios		i		1-stage	2-stage				
				4	12	16	20	28	40
Nominal torque S5 a)		T_{2N}	[Nm]	95	95	95	95	95	95
Acceleration torque S5 b)		T_{2B}	[Nm]	150	140	140	140	140	140
Nominal input speed S5 c)		n_{1N}	[rpm]	2 600	2 900	3 100	3 100	3 100	3 100
Maximum input speed S5		n_{1max}	[rpm]	5 400	5 400	5 400	5 400	5 400	5 400
Emergency stop torque d)		T_{2not}	[Nm]	250	250	250	250	250	250
Efficiency		η	[%]	96	93				
Lifetime		L_h	[h]	> 20 000					
Weight		M	[kg]	4	5				
Angular backlash		j_t	[arcmin]	Precision **P 1** ≤ 1 / **P 3** ≤ 3 / **P 5** ≤ 5 / **P 12** ≤12					
Torsionnal rigidity e)		C_{t2}	[Nm/arcmin]	11.7	11.1	11.1	11.3	11.1	11.1
Noise i)		L_{pA}	[dB(A)]	≤ 70					
Max. permitted housing temperature g)		T	[°C]	90					
Protection class				IP 65					
Direction of rotation				Same way input / output					
Max. radial force on output shaft f)		F_{rmax}	[N]	Center of output shaft: 4 200 / End of output shaft: 3 285					
Max. axial force on output shaft f)		F_{amax}	[N]	3 600					
Color				Red, RAL 3003					
Inertia in kg.cm² h)	Ø11	J_1	[kgcm²]	0.46	0.46	0.45	0.45	0.34	0.31
	Ø14			1.02	1.01	1.00	1.00	0.89	0.86
	Ø19			1.03	1.03	1.02	1.01	0.91	0.88
	Ø24			1.85	1.84	1.83	1.83	1.72	1.69

a) Nominal output torque when operating at n_{1N}.
b) 1000 cycles per hour max.
c) Valid for an ambient temperature of 20°C and T_{2N}. At higher ambient temperatures, please reduce speed.
d) Valid 1000 times the gearbox life.
e) Valid for an input Ø of 19mm in 1-stage and 14mm in 2- and 3-stage.
f) Values for 300 rpm.
g) For other temperatures, please contact us. Nominal output torque when operating at n_{1N}.
h) Depending on the motor output shaft Ø.
i) With **i**=10 and n_{1N}=2500 rpm no load.

Rack

			Pinion 1			Pinion 2		
			Q6	Q7	Q9	Q6	Q7	Q9
Max acceleration force	F_{2B}	[N]	7 490	2 963	5 036	7 490	2 963	5 036
Max acceleration torque	T_{2B}	[Nm]	159	63	107	159	63	107
Precision			P1		P12	P1		P12
Feed force			High	Medium	Elevated	High	Medium	Elevated

Above values for rack and pinion take into consideration a number of load cycles: 1×10^6 for the rack; 1×10^7 for the pinion. Both in pulsating operation.

For proper sizing follow flowchart **calculate your ideal drive train** on pages 136 et seq.

More on the technical datasheets **your ideal drive train** on pages 120 et seq.

Input

A	for motor shaft	L ≤ 45	6 ≤ Ød ≤ 19	result in **LA**
B	for motor shaft	45 < L ≤ 55	19 < Ød ≤ 24	result in **LB**

Output

Standard

0

		1-stage	2-stage	3-stage
LA	[mm]	106.5	128.5	150.5
LB	[mm]	116	138	160

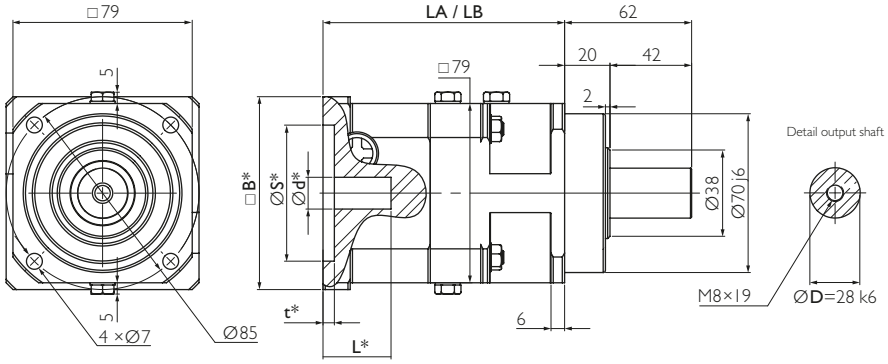

* depending on the motor. See pages 130 et seq.

1

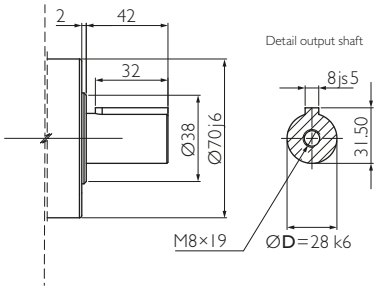

2

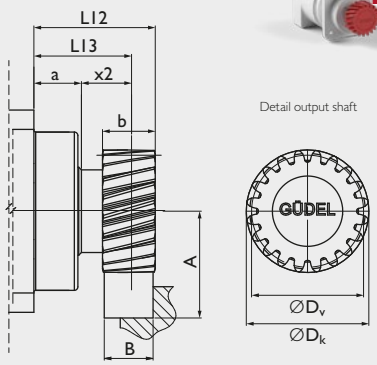

Optional

3

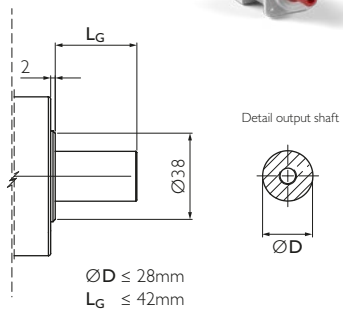

Option 3 on request. Adjustments can reduce capacity.

4

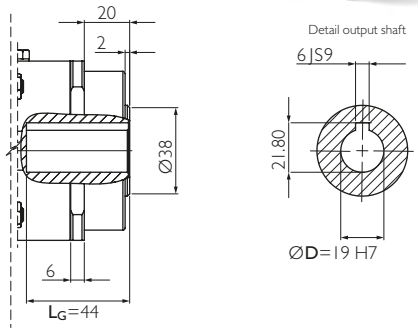

5

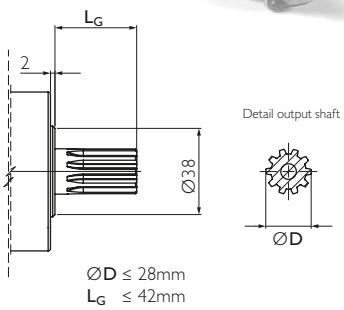

Option 5 on request. Adjustments can reduce capacity.

Example SR 080 A1, 3-stage

Your ideal drive train

Function Package with gearbox, rack and pinion from Güdel

Material	16MnCr5 DIN 1.7131
Teeth	pressure angle α = 20°, helical teeth left, 19°31'42" hardened (58$^{+4}_{0}$ HRC), ground, crowned
Quality	6f24 DIN 3962 / 63 / 67

Pinion

		m_n	P_t	z	A	b	D_k	D_0	D_v	L12	L13	x2	a	M
Pinion 1	[-]	2	6.66	20	43.221	25	46.44	42.441	42.441	52.5	40.0	20.0	20	0.3
Pinion 2	[-]	2.5	8.33	16	43.471	26	48.94	42.441	43.941	58	45	15	30	0.3

m_n: Normal module, P_t: Transverse pitch [mm], z: Number of teeth, D_0: Pitch circle diameter for calculation, D_v: Pitch circle diameter for design, M: Weight [kg]

Available ratios		i		3-stage									
				60	80	100	112	120	140	160	200	280	400
Nominal torque S5 a)		T_{2N}	[Nm]	95	95	95	95	95	95	95	95	95	95
Acceleration torque S5 b)		T_{2B}	[Nm]	140	140	140	140	140	140	140	140	140	140
Nominal input speed S5 c)		n_{1N}	[rpm]	4 000	4 000	4 000	4 000	4 000	4 000	4 000	4 000	4 000	4 000
Maximum input speed S5		n_{1max}	[rpm]	5 400	5 400	5 400	5 400	5 400	5 400	5 400	5 400	5 400	5 400
Emergency stop torque d)		T_{2not}	[Nm]	250	250	250	250	250	250	250	250	250	250
Efficiency		η	[%]	90									
Lifetime		L_h	[h]	> 20 000									
Weight		M	[kg]	6									
Angular backlash		j_t	[arcmin]	Precision **P 1** ≤ 1 / **P 3** ≤ 3 / **P 5** ≤ 5 / **P 12** ≤12									
Torsionnal rigidity e)		C_{t2}	[Nm/arcmin]	10.7	10.7	9.8	10.6	10.6	10.7	10.6	10.7	10.6	10.1
Noise i)		L_{pA}	[dB(A)]	≤ 70									
Max. permitted housing temperature g)		T	[°C]	90									
Protection class				IP 65									
Direction of rotation				Same way input / output									
Max. radial force on output shaft f)		F_{rmax}	[N]	Center of output shaft: 4 200 / End of output shaft: 3 285									
Max. axial force on output shaft f)		F_{amax}	[N]	3 600									
Color				Red, RAL 3003									
Inertia in kg.cm² h)	Ø11	J_1	[kgcm²]	0.46	0.45	0.31	0.34	0.31	0.34	0.31	0.31	0.31	0.31
	Ø14			1.01	1.00	0.86	0.89	0.86	0.89	0.86	0.86	0.86	0.86
	Ø19			1.03	1.02	0.88	0.91	0.88	0.91	0.88	0.88	0.88	0.88
	Ø24			1.84	1.83	1.69	1.72	1.69	1.72	1.69	1.69	1.69	1.69

* Other ratios available. 36, 64, 84, 180, 196, 300, 360, 500, 600, 700, 1 000 on request.

a) Nominal output torque when operating at n_{1N}.

b) 1000 cycles per hour max.

c) Valid for an ambient temperature of 20°C and T_{2N}. At higher ambient temperatures, please reduce speed.

d) Valid 1000 times the gearbox life.

e) Valid for an input Ø of 19 mm in 1-stage and 14 mm in 2- and 3-stage.

f) Values for 300 rpm.

g) For other temperatures, please contact us. Nominal output torque when operating at n_{1N}.

h) Depending on the motor output shaft Ø.

i) With **i**=10 and n_{1N}=2500 rpm no load.

Rack

			Pinion 1			Pinion 2		
			Q6	Q7	Q9	Q6	Q7	Q9
Max acceleration force	F_{2B}	[N]	7 490	2 963	5 036	7 490	2 963	5 036
Max acceleration torque	T_{2B}	[Nm]	159	63	107	159	63	107
Precision			P1		P12	P1		P12
Feed force			High	Medium	Elevated	High	Medium	Elevated

Above values for rack and pinion take into consideration a number of load cycles: 1×10^6 for the rack; 1×10^7 for the pinion. Both in pulsating operation.

For proper sizing follow flowchart **calculate your ideal drive train** on pages 136 et seq.

More on the technical datasheets **your ideal drive train** on pages 120 et seq.

Input

A	for motor shaft	L ≤ 50	9 ≤ Ød ≤ 24	result in **LA**
B	for motor shaft	51 < L ≤ 64	24 < Ød ≤ 35	result in **LB**

Output

Standard

		1-stage	2-stage	3-stage
LA	[mm]	126	164	202
LB	[mm]	140	178	216

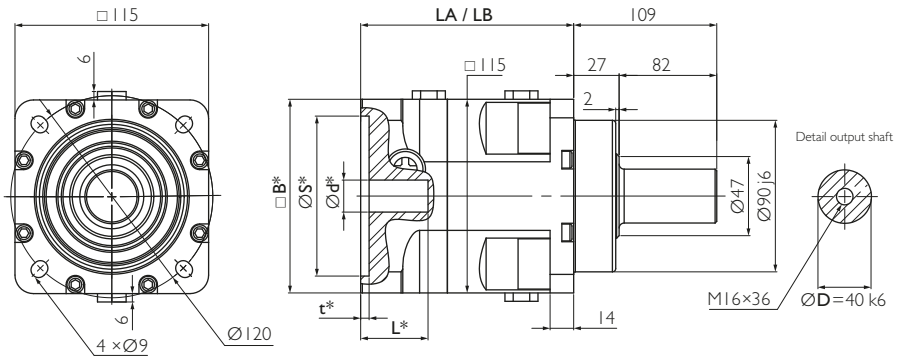

* depending on the motor. See pages 130 et seq.

Example SR 100 A0, 1-stage

0

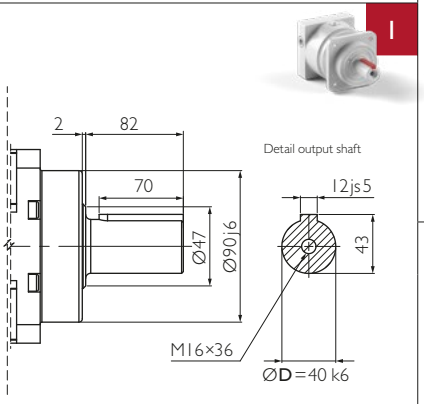

1

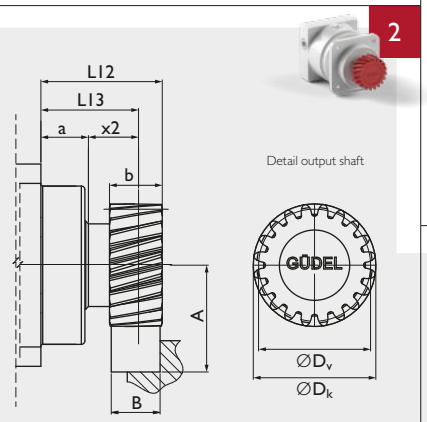

2

Optional

3

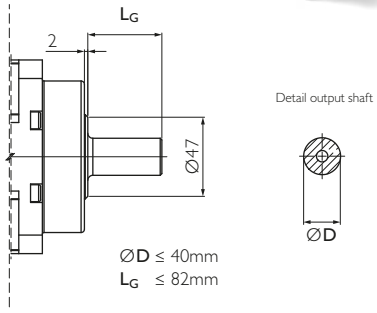

Option 3 on request. Adjustments can reduce capacity.

4

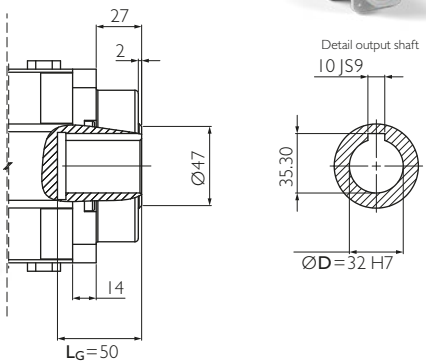

5

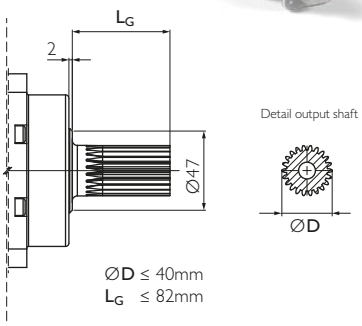

Option 5 on request. Adjustments can reduce capacity.

Your ideal drive train

Function Package with gearbox, rack and pinion from Güdel

Material	16MnCr5 DIN 1.7131
Teeth	pressure angle α = 20°, helical teeth left, 19°31'42" hardened (58^{+4}_{0} HRC), ground, crowned
Quality	6f24 DIN 3962 / 63 / 67

Pinion

		m_n	P_t	z	A	b	D_k	D_0	D_v	L12	L13	x2	a	M
Pinion 1	[-]	2	6.66	25	48.526	25	57.05	53.052	53.052	63.3	51.0	24.0	27	0.4
Pinion 2	[-]	3	10.00	20	57.831	30	69.66	63.662	63.662	69.0	54.0	27.0	27	0.7

m_n: Normal module, P_t: Transverse pitch [mm], z: Number of teeth, D_0: Pitch circle diameter for calculation, D_v: Pitch circle diameter for design, M: Weight [kg]

Available ratios		i		1-stage	2-stage				
				4	12	16	20	28	40
Nominal torque S5 a)		T_{2N}	[Nm]	300	300	300	300	300	300
Acceleration torque S5 b)		T_{2B}	[Nm]	370	370	370	370	370	370
Nominal input speed S5 c)		n_{1N}	[rpm]	2 200	2 600	2 800	2 800	2 800	2 800
Maximum input speed S5		n_{1max}	[rpm]	4 000	4 000	4 000	4 000	4 000	4 000
Emergency stop torque d)		T_{2not}	[Nm]	800	800	800	800	800	800
Efficiency		η	[%]	96	93				
Lifetime		L_h	[h]	> 20 000					
Weight		M	[kg]	8	10				
Angular backlash		j_t	[arcmin]	Precision **P 1** ≤ 1 / **P 3** ≤ 3 / **P 5** ≤ 5 / **P 12** ≤12					
Torsionnal rigidity e)		C_{t2}	[Nm/arcmin]	41.0	32.0	38.7	38.4	36.8	38.7
Noise i)		L_{pA}	[dB(A)]	≤ 71					
Max. permitted housing temperature g)		T	[°C]	90					
Protection class				IP 65					
Direction of rotation				Same way input / output					
Max. radial force on output shaft f)		F_{rmax}	[N]	Center of output shaft: 6 600 / End of output shaft: 4 300					
Max. axial force on output shaft f)		F_{amax}	[N]	6 000					
Color				Red, RAL 3003					
Inertia in kg.cm² h)	Ø14	J_1	[kgcm²]	2.83	2.76	2.69	2.23	1.83	1.60
	Ø19			2.83	2.76	2.69	2.23	1.83	1.60
	Ø24			2.84	2.77	2.70	2.24	1.84	1.61
	Ø32			6.04	5.97	5.90	5.44	5.04	4.81
	Ø35			8.67	8.60	8.53	8.07	7.67	7.44

a) Nominal output torque when operating at n_{1N}.
b) 1000 cycles per hour max.
c) Valid for an ambient temperature of 20°C and T_{2N}. At higher ambient temperatures, please reduce speed.
d) Valid 1000 times the gearbox life.
e) Valid for an input Ø of 24 mm in 1-stage and 19 mm in 2- and 3-stage.
f) Values for 300 rpm.
g) For other temperatures, please contact us. Nominal output torque when operating at n_{1N}.
h) Depending on the motor output shaft Ø.
i) With n_{1N}=2500 rpm no load.

Rack

			Pinion 1			Pinion 2		
			Q6	Q7	Q9	Q6	Q7	Q9
Max acceleration force	F_{2B}	[N]	7 540	4 107	4 805	16 163	7 565	12 980
Max acceleration torque	T_{2B}	[Nm]	200	109	127	515	241	413
Precision			P1		P12	P1		P12
Feed force			High	Medium	Elevated	High	Medium	Elevated

Above values for rack and pinion take into consideration a number of load cycles: 1×10^6 for the rack; 1×10^7 for the pinion. Both in pulsating operation.

For proper sizing follow flowchart **calculate your ideal drive train** on pages 136 et seq.

More on the technical datasheets **your ideal drive train** on pages 120 et seq.

Input

A	for motor shaft	L ≤ 50	9 ≤ Ød ≤ 24	result in **LA**
B	for motor shaft	51 < L ≤ 64	24 < Ød ≤ 35	result in **LB**

		1-stage	2-stage	3-stage
LA	[mm]	126	164	202
LB	[mm]	140	178	216

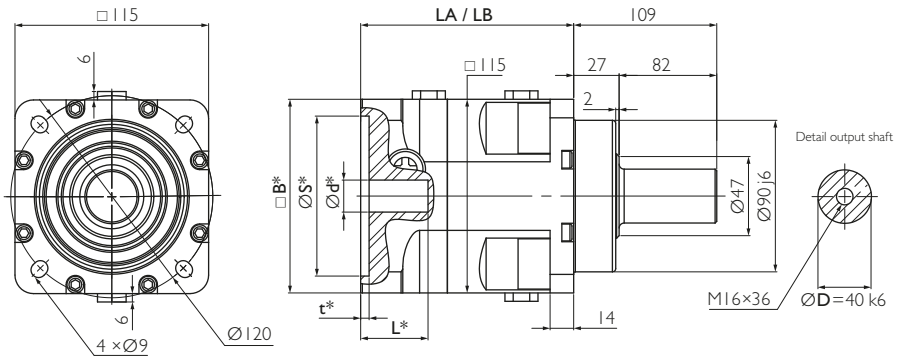

* depending on the motor. See pages 130 et seq.

Output

Standard

0

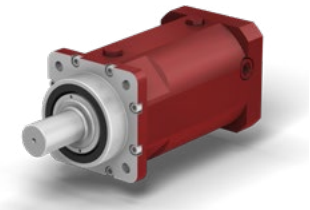

Example SR 100 A0. 3-stage

1

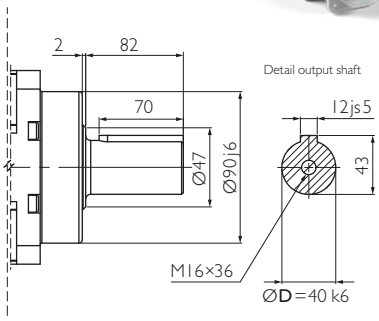

2

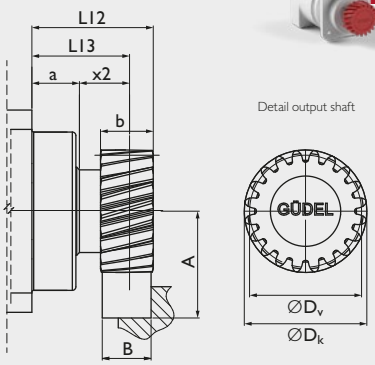

Optional

3

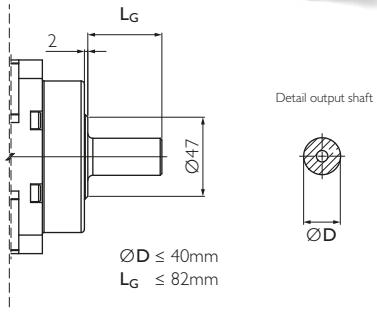

Option 3 on request. Adjustments can reduce capacity.

4

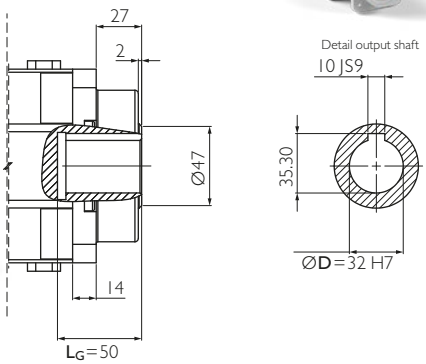

5

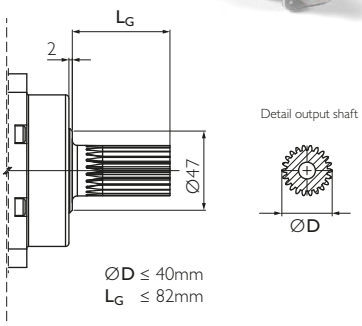

Option 5 on request. Adjustments can reduce capacity.

Your ideal drive train

Function Package with gearbox, rack and pinion from Güdel

Material	16MnCr5 DIN 1.7131
Teeth	pressure angle α = 20°, helical teeth left, 19°31'42" hardened (58^{+4}_{0} HRC), ground, crowned
Quality	6f24 DIN 3962 / 63 / 67

Pinion

		m_n	P_t	z	A	b	D_k	D_0	D_v	L12	L13	x2	a	M
Pinion 1	[-]	2	6.66	25	48.526	25	57.05	53.052	53.052	63.3	51.0	24.0	27	0.4
Pinion 2	[-]	3	10.00	20	57.831	30	69.66	63.662	63.662	69.0	54.0	27.0	27	0.7

m_n: Normal module, P_t: Transverse pitch [mm], z: Number of teeth, D_0: Pitch circle diameter for calculation, D_v: Pitch circle diameter for design, M: Weight [kg]

Available ratios *		i		3-stage									
				60	80	100	112	120	140	160	200	280	400
Nominal torque S5 a)		T_{2N}	[Nm]	300	300	300	300	300	300	300	300	300	300
Acceleration torque S5 b)		T_{2B}	[Nm]	404	404	404	404	404	404	404	404	404	404
Nominal input speed S5 c)		n_{1N}	[rpm]	3 800	3 800	3 800	3 800	3 800	3 800	3 800	3 800	3 800	3 800
Maximum input speed S5		n_{1max}	[rpm]	4 500	4 500	4 500	4 500	4 500	4 500	4 500	4 500	4 500	4 500
Emergency stop torque d)		T_{2not}	[Nm]	800	800	800	800	800	800	800	800	800	800
Efficiency		η	[%]	90									
Lifetime		L_h	[h]	> 20 000									
Weight		M	[kg]	12									
Angular backlash		j_t	[arcmin]	Precision **P 1** ≤ 1 / **P 3** ≤ 3 / **P 5** ≤ 5 / **P 12** ≤12									
Torsionnal rigidity e)		C_{t2}	[Nm/arcmin]	38.4	38.4	34.3	37.0	37.0	38.4	37.0	38.4	37.0	37.0
Noise i)		L_{pA}	[dB(A)]	≤ 71									
Max. permitted housing temperature g)		T	[°C]	90									
Protection class				IP 65									
Direction of rotation				Same way input / output									
Max. radial force on output shaft f)		F_{rmax}	[N]	Center of output shaft: 6 600 / End of output shaft: 4 300									
Max. axial force on output shaft f)		F_{amax}	[N]	6 000									
Color				Red, RAL 3003									
Inertia in kg.cm² h)	Ø14	J_1	[kgcm²]	2.23	2.22	1.59	1.83	1.59	1.82	1.60	1.59	1.59	1.59
	Ø19			2.23	2.22	1.59	1.83	1.59	1.82	1.60	1.59	1.59	1.59
	Ø24			2.24	2.23	1.60	1.84	1.61	1.83	1.61	1.60	1.60	1.60
	Ø32			5.44	5.43	4.80	5.04	4.80	5.03	4.81	4.80	4.80	4.80
	Ø35			8.07	8.06	7.43	7.67	7.44	7.66	7.44	7.43	7.43	7.43

* Other ratios available. 36, 64, 84, 180, 196, 300, 360, 500, 600, 700, 1000 on request.

a) Nominal output torque when operating at n_{1N}.

b) 1000 cycles per hour max.

c) Valid for an ambient temperature of 20°C and T_{2N}. At higher ambient temperatures, please reduce speed.

d) Valid 1000 times the gearbox life.

e) Valid for an input Ø of 24 mm in 1-stage and 19 mm in 2- and 3-stage.

f) Values for 300 rpm.

g) For other temperatures, please contact us. Nominal output torque when operating at n_{1N}.

h) Depending on the motor output shaft Ø.

i) With n_{1N}=2500 rpm no load.

Rack

			Pinion 1			Pinion 2		
			Q6	Q7	Q9	Q6	Q7	Q9
Max acceleration force	F_{2B}	[N]	7 540	4 107	4 805	16 163	7 565	12 980
Max acceleration torque	T_{2B}	[Nm]	200	109	127	515	241	413
Precision			P1		P12	P1		P12
Feed force			High	Medium	Elevated	High	Medium	Elevated

Above values for rack and pinion take into consideration a number of load cycles: 1×10^6 for the rack; 1×10^7 for the pinion. Both in pulsating operation.

For proper sizing follow flowchart **calculate your ideal drive train** on pages 136 et seq.

More on the technical datasheets **your ideal drive train** on pages 120 et seq.

Input

A	for motor shaft	L ≤ 51	14 ≤ Ød ≤ 24	result in **LA**
B	for motor shaft	51 < L ≤ 63	24 < Ød ≤ 35	result in **LB**
C	for motor shaft	63 < L ≤ 83	24 < Ød ≤ 42	result in **LC**

		1-stage	2-stage	3-stage
LA	[mm]	143	185	227
LB	[mm]	155	197	239
LC	[mm]	175	217	

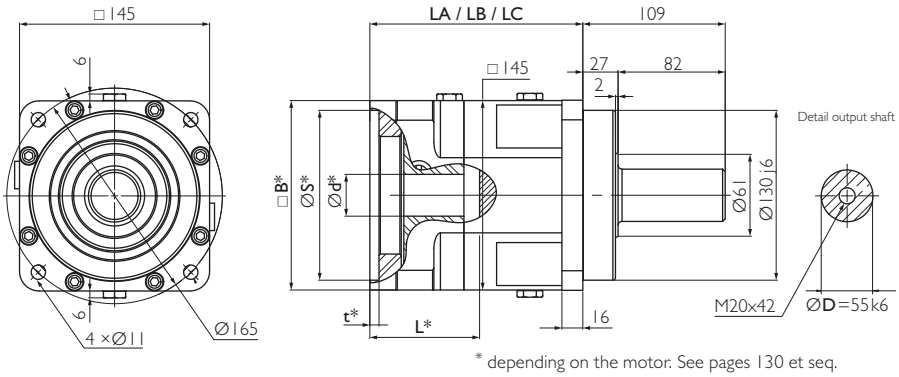

* depending on the motor. See pages 130 et seq.

Example SR 140 A2, 1-stage

Output

Standard

0

1

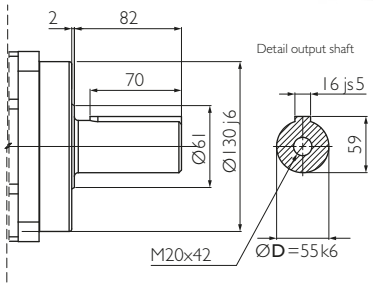

2

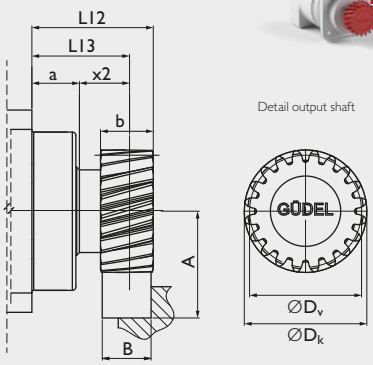

Optional

3

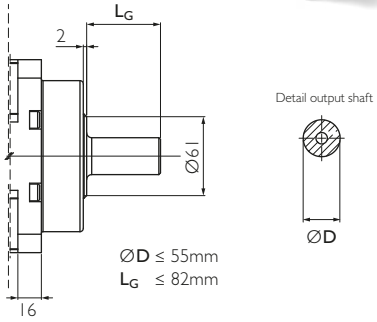

Option 3 on request. Adjustments can reduce capacity.

4

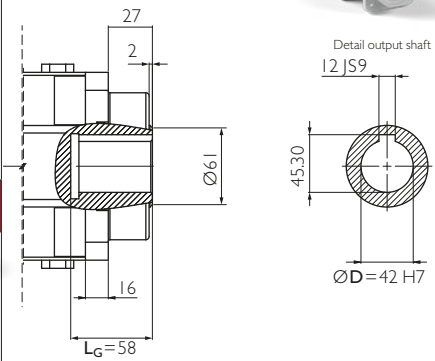

5

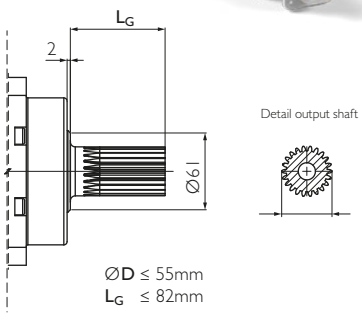

Option 5 on request. Adjustments can reduce capacity.

Your ideal drive train

Function Package with gearbox, rack and pinion from Güdel

Material	16MnCr5 DIN 1.7131
Teeth	pressure angle α = 20°, helical teeth left, 19°31'42" hardened (58$^{+4}_{0}$ HRC), ground, crowned
Quality	6f24 DIN 3962 / 63 / 67

Pinion

		m_n	P_t	z	A	b	D_k	D_0	D_v	L12	L13	x2	a	M
Pinion 1	[-]	3	10.00	22	61.014	30	76.03	70.028	70.028	69.5	54.5	27.5	27	0.8
Pinion 2	[-]	4	13.33	20	77.441	40	92.88	84.883	84.883	79.0	59.0	32.0	27	1.6

m_n: Normal module, P_t: Transverse pitch [mm], z: Number of teeth, D_0: Pitch circle diameter for calculation, D_v: Pitch circle diameter for design, M: Weight [kg]

Available ratios		i		1-stage	2-stage				
				4	12	16	20	28	40
Nominal torque S5 a)		T_{2N}	[Nm]	500	500	500	500	500	500
Acceleration torque S5 b)		T_{2B}	[Nm]	750	750	750	750	750	750
Nominal input speed S5 c)		n_{1N}	[rpm]	1 900	2 400	2 600	2 600	2 600	2 600
Maximum input speed S5		n_{1max}	[rpm]	3 600	3 600	3 600	3 600	3 600	3 600
Emergency stop torque d)		T_{2not}	[Nm]	1 300	1 300	1 300	1 300	1 300	1 300
Efficiency		η	[%]	96	93				
Lifetime		L_h	[h]	> 20 000					
Weight		M	[kg]	14	18				
Angular backlash		j_t	[arcmin]	Precision **P 1** ≤ 1 / **P 3** ≤ 3 / **P 5** ≤ 5 / **P 12** ≤12					
Torsionnal rigidity e)		C_{t2}	[Nm/arcmin]	106.2	85.0	95.7	102.1	95.7	95.7
Noise i)		L_{pA}	[dB(A)]	≤ 71					
Max. permitted housing temperature g)		T	[°C]	90					
Protection class				IP 65					
Direction of rotation				Same way input / output					
Max. radial force on output shaft f)		F_{rmax}	[N]	Center of output shaft: 9 950 / End of output shaft: 6 700					
Max. axial force on output shaft f)		F_{amax}	[N]	10 300					
Color				Red, RAL 3003					
Inertia in kg.cm² h)	Ø14	J_1	[kgcm²]	7.12	6.86	6.63	5.29	4.15	3.48
	Ø19			7.12	6.86	6.63	5.29	4.15	3.48
	Ø24			8.13	7.87	7.64	6.30	5.16	4.49
	Ø32			10.33	10.07	9.84	8.50	7.36	6.69
	Ø35			13.16	12.90	12.67	11.33	10.19	9.52
	Ø38			18.35	18.09	17.86	16.52	15.38	14.71
	Ø42			17.95	17.69	17.46	16.12	14.98	14.31

a) Nominal output torque when operating at n_{1N}.
b) 1000 cycles per hour max.
c) Valid for an ambient temperature of 20°C and T_{2N}. At higher ambient temperatures, please reduce speed.
d) Valid 1000 times the gearbox life.
e) Valid for an input Ø of 38 mm in 1-stage and 24 mm in 2- and 3-stage.
f) Values for 300 rpm.
g) For other temperatures, please contact us. Nominal output torque when operating at n_{1N}.
h) Depending on the motor output shaft Ø.
i) With n_{1N}=2500 rpm no load.

Rack

			Pinion 1			Pinion 2		
			Q6	Q7	Q9	Q6	Q7	Q9
Max acceleration force	F_{2B}	[N]	16 230	8 715	12 919	28 585	14 084	24 045
Max acceleration torque	T_{2B}	[Nm]	568	305	452	1 213	598	1 021
Precision			P1		P12	P1		P12
Feed force			High	Medium	Elevated	High	Medium	Elevated

Above values for rack and pinion take into consideration a number of load cycles: 1×10^6 for the rack; 1×10^7 for the pinion. Both in pulsating operation.

For proper sizing follow flowchart **calculate your ideal drive train** on pages 136 et seq.

More on the technical datasheets **your ideal drive train** on pages 120 et seq.

Input

A	for motor shaft	L ≤ 51	14 ≤ Ød ≤ 24	result in **LA**
B	for motor shaft	51 < L ≤ 63	24 < Ød ≤ 35	result in **LB**
C	for motor shaft	63 < L ≤ 83	24 < Ød ≤ 42	result in **LC**

		1-stage	2-stage	3-stage
LA	[mm]	143	185	227
LB	[mm]	155	197	239
LC	[mm]	175	217	

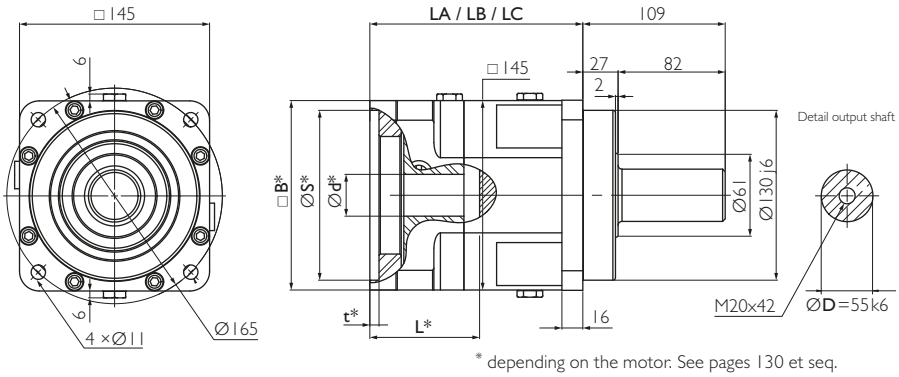

* depending on the motor. See pages 130 et seq.

Example SR 140 A4, 1-stage

Output

Standard

0

1

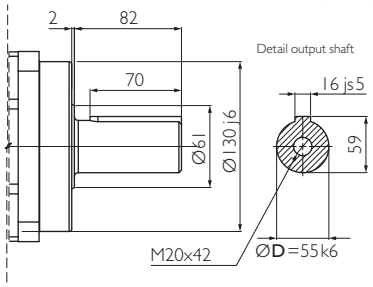

2

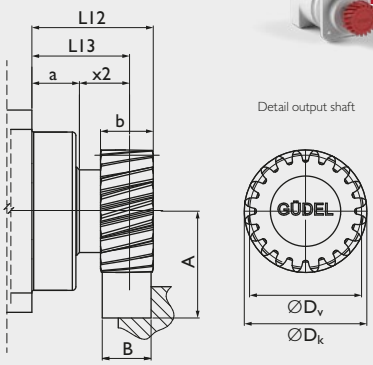

Optional

3

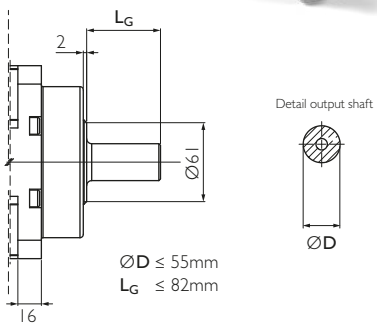

Option 3 on request. Adjustments can reduce capacity.

4

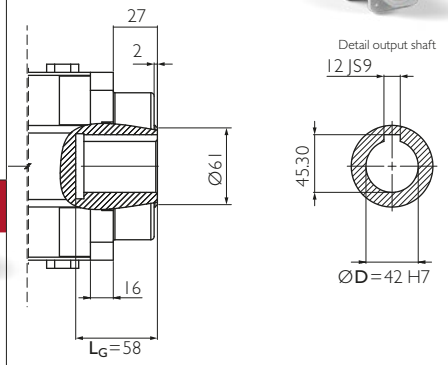

5

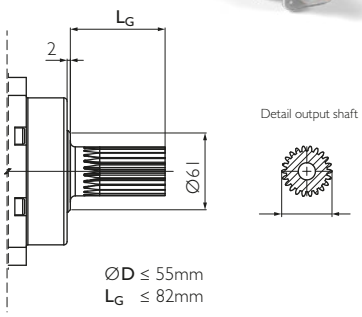

Option 5 on request. Adjustments can reduce capacity.

Your ideal drive train

Function Package with gearbox, rack and pinion from Güdel

Material	16MnCr5 DIN 1.7131
Teeth	pressure angle α = 20°, helical teeth left, 19°31'42" hardened (58^{+4}_{0} HRC), ground, crowned
Quality	6f24 DIN 3962 / 63 / 67

Pinion

		m_n	P_t	z	A	b	D_k	D_0	D_v	L12	L13	x2	a	M
Pinion 1	[-]	3	10.00	22	61.014	30	76.03	70.028	70.028	69.5	54.5	27.5	27	0.8
Pinion 2	[-]	4	13.33	20	77.441	40	92.88	84.883	84.883	79.0	59.0	32.0	27	1.6

m_n: Normal module, P_t: Transverse pitch [mm], z: Number of teeth, D_0: Pitch circle diameter for calculation, D_v: Pitch circle diameter for design, M: Weight [kg]

Available ratios *		i		3-stage									
				60	80	100	112	120	140	160	200	280	400
Nominal torque S5 a)		T_{2N}	[Nm]	500	500	500	500	500	500	500	500	500	500
Acceleration torque S5 b)		T_{2B}	[Nm]	750	750	750	750	750	750	750	750	750	750
Nominal input speed S5 c)		n_{1N}	[rpm]	3 500	3 500	3 500	3 500	3 500	3 500	3 500	3 500	3 500	3 500
Maximum input speed S5		n_{1max}	[rpm]	4 000	4 000	4 000	4 000	4 000	4 000	4 000	4 000	4 000	4 000
Emergency stop torque d)		T_{2not}	[Nm]	1 300	1 300	1 300	1 300	1 300	1 300	1 300	1 300	1 300	1 300
Efficiency		η	[%]	90									
Lifetime		L_h	[h]	> 20 000									
Weight		M	[kg]	22									
Angular backlash		j_t	[arcmin]	Precision **P 1** ≤ 1 / **P 3** ≤ 3 / **P 5** ≤ 5 / **P 12** ≤12									
Torsionnal rigidity e)		C_{t2}	[Nm/arcmin]	92	92	84	86	86	92	86	92	86	86
Noise i)		L_{pA}	[dB(A)]	≤ 71									
Max. permitted housing temperature g)		T	[°C]	90									
Protection class				IP 65									
Direction of rotation				Same way input / output									
Max. radial force on output shaft f)		F_{rmax}	[N]	Center of output shaft: 9 950 / End of output shaft: 6 700									
Max. axial force on output shaft f)		F_{amax}	[N]	10 300									
Color				Red, RAL 3003									
Inertia in kg.cm² h)	Ø14	J_1	[kgcm²]	5.28	5.27	3.44	4.14	3.47	4.11	3.47	3.46	3.45	3.44
	Ø19			5.28	5.27	3.44	4.14	3.47	4.11	3.47	3.46	3.45	3.44
	Ø24			6.29	6.28	4.45	5.15	4.48	5.12	4.48	4.47	4.46	4.45
	Ø32			8.49	8.48	6.65	7.35	6.68	7.32	6.68	6.67	6.66	6.65
	Ø35			11.32	11.31	9.48	10.18	9.51	10.15	9.51	9.50	9.49	9.48
	Ø38			16.51	16.50	14.67	15.37	14.70	15.34	14.70	14.69	14.68	14.67
	Ø42			16.11	16.10	14.27	14.97	14.30	14.94	14.30	14.29	14.28	14.27

* Other ratios available. 36, 64, 84, 180, 196, 300, 360, 500, 600, 700, 1 000 on request.

a) Nominal output torque when operating at n_{1N}.

b) Maximal 1 000 Zyklen pro Stunde

c) Valid for an ambient temperature of 20°C and T_{2N}. At higher ambient temperatures, please reduce speed.

d) Valid 1000 times the gearbox life.

e) Valid for an input Ø of 38 mm in 1-stage and 24 mm in 2- and 3-stage.

f) Values for 300 rpm.

g) For other temperatures, please contact us. Nominal output torque when operating at n_{1N}.

h) Depending on the motor output shaft Ø.

i) With n_{1N}=2500 rpm no load.

Rack

			Pinion 1			Pinion 2		
			Q6	Q7	Q9	Q6	Q7	Q9
Max acceleration force	F_{2B}	[N]	16 230	8 715	12 919	28 585	14 084	24 045
Max acceleration torque	T_{2B}	[Nm]	568	305	452	1 213	598	1 021
Precision			P1		P12	P1		P12
Feed force			High	Medium	Elevated	High	Medium	Elevated

Above values for rack and pinion take into consideration a number of load cycles: 1×10^6 for the rack; 1×10^7 for the pinion. Both in pulsating operation.

For proper sizing follow flowchart **calculate your ideal drive train** on pages 136 et seq.

More on the technical datasheets **your ideal drive train** on pages 120 et seq.

Input

A	for motor shaft	L ≤ 60	19 ≤ Ød ≤ 32	result in LA
B	for motor shaft	60 < L ≤ 85	32 < Ød ≤ 48	result in LB
C	for motor shaft	85 < L ≤ 111	32 < Ød ≤ 48	result in LC

Output

Standard

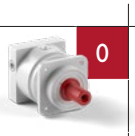

		1-stage	2-stage	3-stage
LA	[mm]	168	220	273
LB	[mm]	193	246	298
LC	[mm]	219	272	

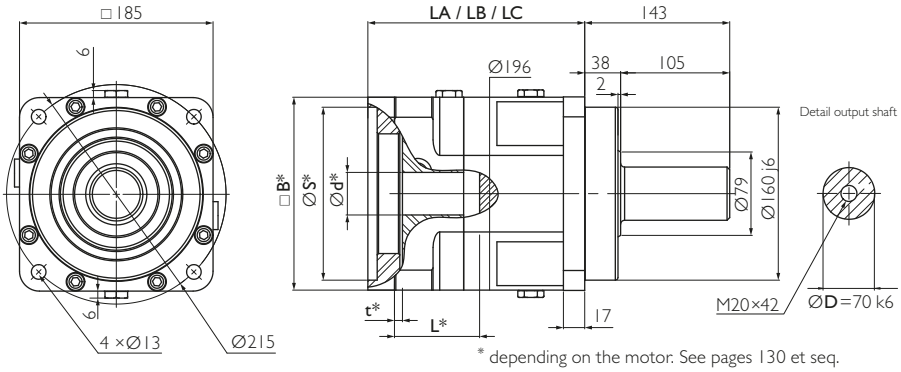

* depending on the motor. See pages 130 et seq.

Optional

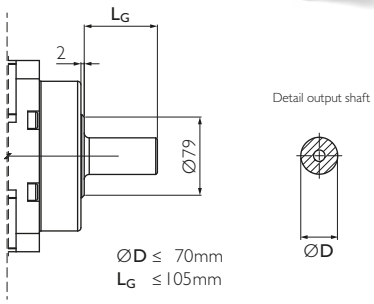

Option 3 on request. Adjustments can reduce capacity.

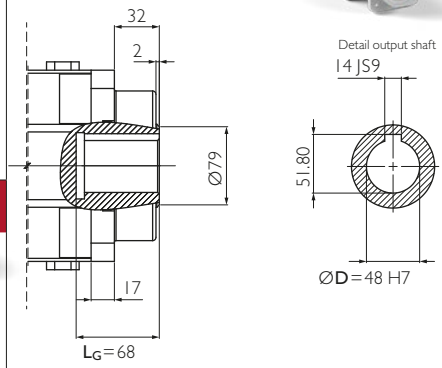

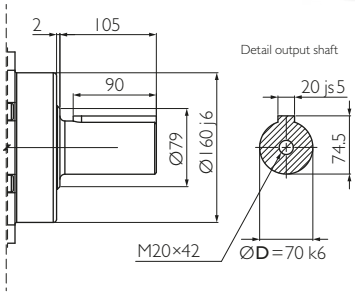

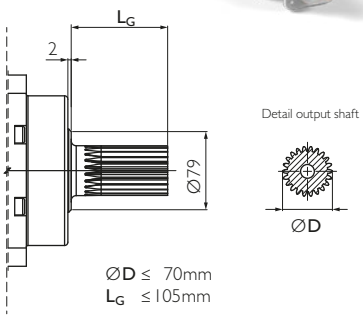

Option 5 on request. Adjustments can reduce capacity.

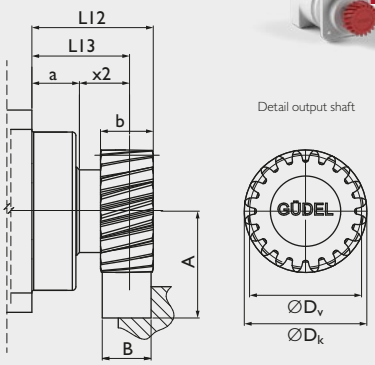

Example SR 180 A2, 1-stage

Your ideal drive train

Function Package with gearbox, rack and pinion from Güdel

Material	16MnCr5 DIN 1.7131
Teeth	pressure angle α = 20°, helical teeth left, 19°31'42" hardened (58^{+4}_{0} HRC), ground, crowned
Quality	6f24 DIN 3962 / 63 / 67

Pinion

		m_n	P_t	z	A	b	D_k	D_0	D_v	L12	L13	x2	a	M
Pinion 1	[-]	4	13.33	20	77.441	40	92.88	84.883	84.883	89.5	69.5	31.5	38	1.5
Pinion 2	[-]	5	16.66	20	87.052	50	116.10	106.103	106.103	95.5	70.5	32.5	38	3.0

m_n: Normal module, P_t: Transverse pitch [mm], z: Number of teeth, D_0: Pitch circle diameter for calculation, D_v: Pitch circle diameter for design, M: Weight [kg]

Available ratios		i		1-stage	2-stage				
				4	12	16	20	28	40
Nominal torque S5 a)		T_{2N}	[Nm]	1 100	1 100	1 100	1 100	1 100	1 100
Acceleration torque S5 b)		T_{2B}	[Nm]	1 500	1 500	1 500	1 500	1 500	1 500
Nominal input speed S5 c)		n_{1N}	[rpm]	1 300	2 200	2 400	2 400	2 400	2 400
Maximum input speed S5		n_{1max}	[rpm]	3 100	3 600	3 600	3 600	3 600	3 600
Emergency stop torque d)		T_{2not}	[Nm]	2 780	2 780	2 780	2 780	2 780	2 780
Efficiency		η	[%]	96	93				
Lifetime		L_h	[h]	> 20 000					
Weight		M	[kg]	32	39				
Angular backlash		j_t	[arcmin]	Precision **P 1** ≤ 1 / **P 3** ≤ 3 / **P 5** ≤ 5 / **P 12** ≤12					
Torsionnal rigidity e)		C_{t2}	[Nm/arcmin]	191.8	147.5	172.5	182.7	172.5	172.5
Noise i)		L_{pA}	[dB(A)]	≤ 72					
Max. permitted housing temperature g)		T	[°C]	90					
Protection class				IP 65					
Direction of rotation				Same way input / output					
Max. radial force on output shaft f)		F_{rmax}	[N]	Center of output shaft: 18 000 / End of output shaft: 13 000					
Max. axial force on output shaft f)		F_{amax}	[N]	15 000					
Color				Red, RAL 3003					
Inertia in kg.cm² h)	Ø19	J_1	[kgcm²]	23.35	23.57	22.65	16.76	11.90	9.07
	Ø24			24.40	24.62	23.70	17.81	12.95	10.12
	Ø32			26.61	26.83	25.91	20.02	15.16	12.33
	Ø35			29.53	29.75	28.83	22.94	18.08	15.25
	Ø38			35.13	35.35	34.43	28.54	23.68	20.85
	Ø42			34.63	34.85	33.93	28.04	23.18	20.35
	Ø48			35.03	35.25	34.33	28.44	23.58	20.75

a) Nominal output torque when operating at n_{1N}.
b) 1000 cycles per hour max.
c) Valid for an ambient temperature of 20°C and T_{2N}. At higher ambient temperatures, please reduce speed.
d) Valid 1000 times the gearbox life.
e) Valid for an input Ø of 48 mm in 1-stage and 38 mm in 2- and 3-stage.
f) Values for 300 rpm.
g) For other temperatures, please contact us. Nominal output torque when operating at n_{1N}.
h) Depending on the motor output shaft Ø.
i) With n_{1N}=2500 rpm no load.

Rack

			Pinion 1			Pinion 2		
			Q6	Q7	Q9	Q6	Q7	Q9
Max acceleration force	F_{2B}	[N]	28 585	14 084	24 045	44 505	23 785	40 048
Max acceleration torque	T_{2B}	[Nm]	1 213	598	1 021	2 361	1 262	2 125
Precision			P1		P12	P1		P12
Feed force			High	Medium	Elevated	High	Medium	Elevated

Above values for rack and pinion take into consideration a number of load cycles: 1×10^6 for the rack; 1×10^7 for the pinion. Both in pulsating operation.

For proper sizing follow flowchart **calculate your ideal drive train** on pages 136 et seq.

More on the technical datasheets **your ideal drive train** on pages 120 et seq.

Input

A	for motor shaft	L ≤ 60	19 ≤ Ød ≤ 32	result in **LA**
B	for motor shaft	60 < L ≤ 85	32 < Ød ≤ 48	result in **LB**
C	for motor shaft	85 < L ≤ 111	32 < Ød ≤ 48	result in **LC**

		1-stage	2-stage	3-stage
LA	[mm]	168	220	273
LB	[mm]	193	246	298
LC	[mm]	219	272	

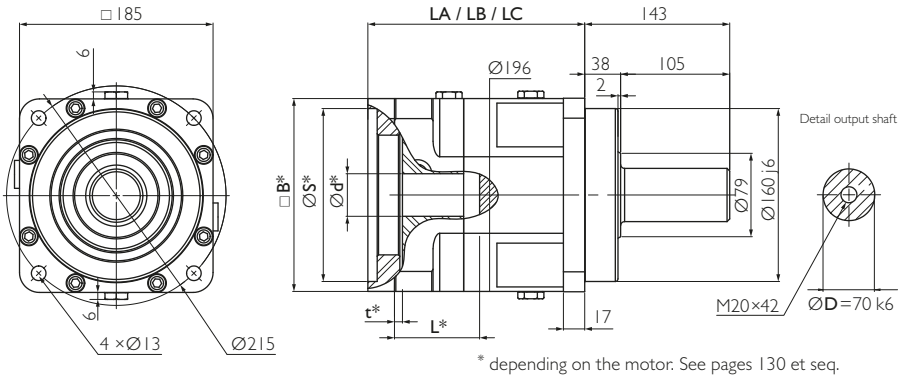

* depending on the motor. See pages 130 et seq.

Example SR 180 A5, 1-stage

Output

Standard

0

1

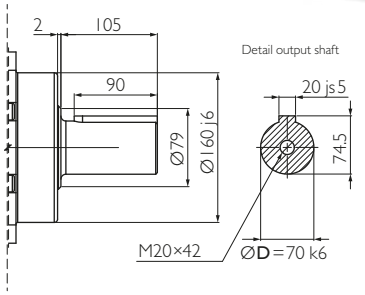

2

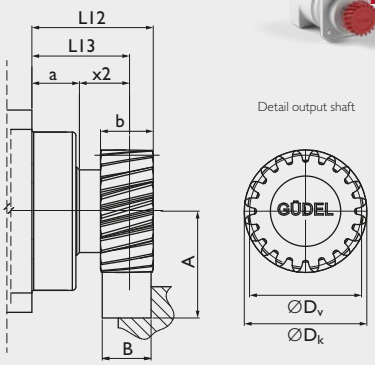

Optional

3

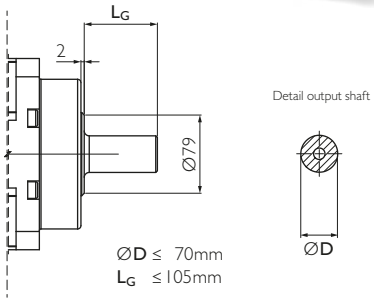

Option 3 on request. Adjustments can reduce capacity.

4

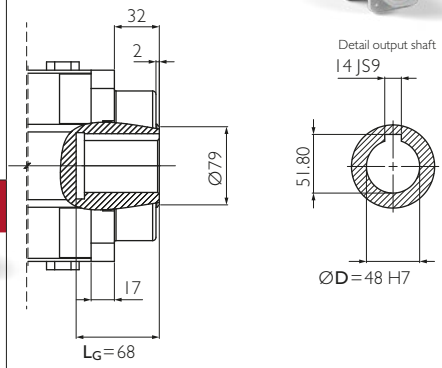

5

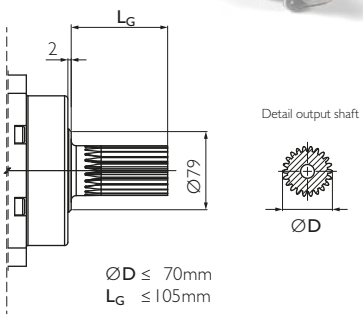

Option 5 on request. Adjustments can reduce capacity.

Your ideal drive train

Function Package with gearbox, rack and pinion from Güdel

Material	16MnCr5 DIN 1.7131
Teeth	pressure angle α = 20°, helical teeth left, 19°31'42" hardened (58^{+4}_{0} HRC), ground, crowned
Quality	6f24 DIN 3962 / 63 / 67

Pinion

		m_n	P_t	z	A	b	D_k	D_0	D_v	L12	L13	x2	a	M
Pinion 1	[-]	4	13.33	20	77.441	40	92.88	84.883	84.883	89.5	69.5	31.5	38	1.5
Pinion 2	[-]	5	16.66	20	87.052	50	116.10	106.103	106.103	95.5	70.5	32.5	38	3.0

m_n: Normal module, P_t: Transverse pitch [mm], z: Number of teeth, D_0: Pitch circle diameter for calculation, D_v: Pitch circle diameter for design, M: Weight [kg]

Available ratios *		i		3-stage									
				60	80	100	112	120	140	160	200	280	400
Nominal torque S5 a)		T_{2N}	[Nm]	1 100	1 100	1 100	1 100	1 100	1 100	1 100	1 100	1 100	1 100
Acceleration torque S5 b)		T_{2B}	[Nm]	1 500	1 500	1 500	1 500	1 500	1 500	1 500	1 500	1 500	1 500
Nominal input speed S5 c)		n_{1N}	[rpm]	3 000	3 000	3 000	3 000	3 000	3 000	3 000	3 000	3 000	3 000
Maximum input speed S5		n_{1max}	[rpm]	3 600	3 600	3 600	3 600	3 600	3 600	3 600	3 600	3 600	3 600
Emergency stop torque d)		T_{2not}	[Nm]	2 780	2 780	2 780	2 780	2 780	2 780	2 780	2 780	2 780	2 780
Efficiency		η	[%]	90									
Lifetime		L_h	[h]	> 20 000									
Weight		M	[kg]	46									
Angular backlash		j_t	[arcmin]	Precision **P 1** ≤ 1 / **P 3** ≤ 3 / **P 5** ≤ 5 / **P 12** ≤12									
Torsionnal rigidity e)		C_{t2}	[Nm/arcmin]	173.4	173.4	173.1	164.1	164.1	173.4	164.1	140.0	164.1	164.1
Noise i)		L_{pA}	[dB(A)]	≤ 72									
Max. permitted housing temperature g)		T	[°C]	90									
Protection class				IP 65									
Direction of rotation				Same way input / output									
Max. radial force on output shaft f)		F_{rmax}	[N]	Center of output shaft: 18 000 / End of output shaft: 13 000									
Max. axial force on output shaft f)		F_{amax}	[N]	15 000									
Color				Red, RAL 3003									
Inertia in kg.cm² h)	Ø19	J_1	[kgcm²]	16.77	16.73	8.93	11.88	9.07	11.76	9.06	9.00	8.96	8.93
	Ø24			17.82	17.78	9.98	12.93	10.12	12.81	10.11	10.05	10.01	9.98
	Ø32			20.03	19.99	12.19	15.14	12.33	15.02	12.32	12.26	12.22	12.19
	Ø35			22.95	22.91	15.11	18.06	15.25	17.94	15.24	15.18	15.14	15.11
	Ø38			28.55	28.51	20.71	23.66	20.85	23.54	20.84	20.78	20.74	20.71
	Ø42			28.05	28.01	20.21	23.16	20.35	23.04	20.34	20.28	20.24	20.21
	Ø48			28.45	28.41	20.61	23.56	20.75	23.44	20.74	20.68	20.64	20.61

* Other ratios available. 36, 64, 84, 180, 196, 300, 360, 500, 600, 700, 1000 on request.

a) Nominal output torque when operating at n_{1N}.

b) 1000 cycles per hour max.

c) Valid for an ambient temperature of 20°C and T_{2N}. At higher ambient temperatures, please reduce speed.

d) Valid 1000 times the gearbox life.

e) Valid for an input Ø of 48 mm in 1-stage and 38 mm in 2- and 3-stage.

f) Values for 300 rpm.

g) For other temperatures, please contact us. Nominal output torque when operating at n_{1N}.

h) Depending on the motor output shaft Ø.

i) With n_{1N}=2500 rpm no load.

Rack

			Pinion 1			Pinion 2		
			Q6	Q7	Q9	Q6	Q7	Q9
Max acceleration force	F_{2B}	[N]	28 585	14 084	24 045	44 505	23 785	40 048
Max acceleration torque	T_{2B}	[Nm]	1 213	598	1 021	2 361	1 262	2 125
Precision			P1		P12	P1		P12
Feed force			High	Medium	Elevated	High	Medium	Elevated

Above values for rack and pinion take into consideration a number of load cycles: 1×10^6 for the rack; 1×10^7 for the pinion. Both in pulsating operation.

For proper sizing follow flowchart **calculate your ideal drive train** on pages 136 et seq.

More on the technical datasheets **your ideal drive train** on pages 120 et seq.

Input

A	for motor shaft	L ≤ 85	24 ≤ Ød ≤ 48	result in **LA**
B	for motor shaft	85 < L ≤ 115	48 < Ød ≤ 55	result in **LB**

Output

Standard

0

		1-stage	2-stage	3-stage
LA	[mm]	229	300	371
LB	[mm]	259	330	

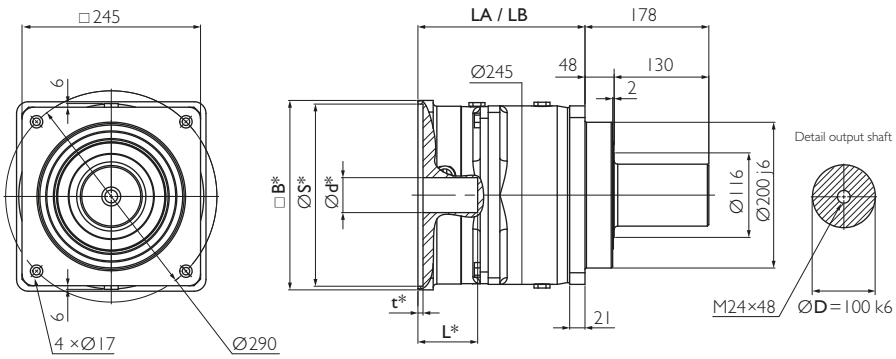

* depending on the motor. See pages 130 et seq.

1

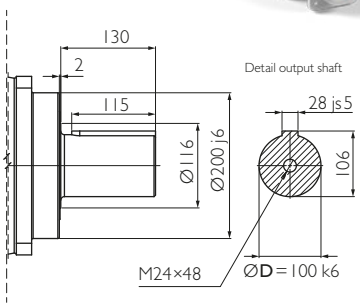

2

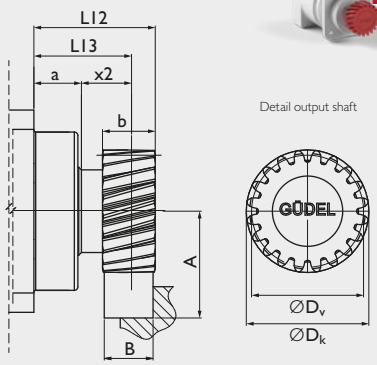

Optional

3

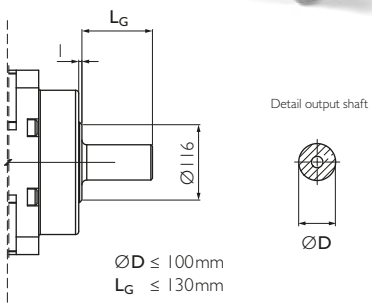

Option 3 on request. Adjustments can reduce capacity.

4

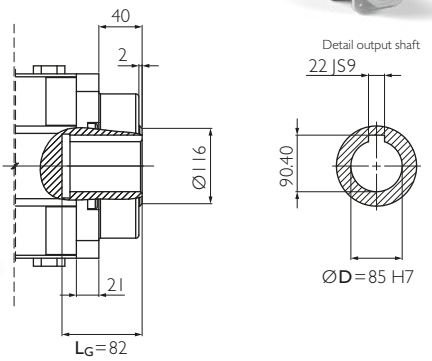

5

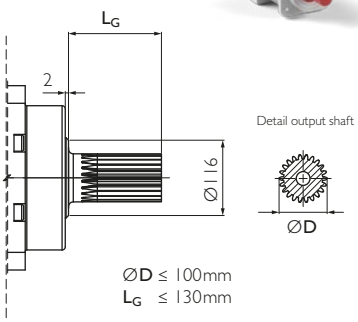

Option 5 on request. Adjustments can reduce capacity.

Example SR 240 B4, 1-stage

Your ideal drive train

Function Package with gearbox, rack and pinion from Güdel

Material	16MnCr5 DIN 1.7131
Teeth	pressure angle α = 20°, helical teeth left, 19°31'42" hardened (58^{+4}_{0} HRC), ground, crowned
Quality	6f24 DIN 3962 / 63 / 67

Pinion

		m_n	P_t	z	A	b	D_k	D_0	D_v	L12	L13	x2	a	M
Pinion 1	[-]	5	16.66	24	97.662	50	137.32	127.324	127.324	120.5	95.5	47.5	48	5.4
Pinion 2	[-]	6	20.00	20	106.662	60	139.32	127.324	127.324	119.0	89.0	41.0	48	5.6

m_n: Normal module, P_t: Transverse pitch [mm], z: Number of teeth, D_0: Pitch circle diameter for calculation, D_v: Pitch circle diameter for design, M: Weight [kg]

Available ratios		i		1-stage	2-stage				
				4	12	16	20	28	40
Nominal torque S5 a)		T_{2N}	[Nm]	3 600	3 600	3 600	3 600	3 600	3 600
Acceleration torque S5 b)		T_{2B}	[Nm]	4 800	4 800	4 800	4 800	4 800	4 800
Nominal input speed S5 c)		n_{1N}	[rpm]	900	1 500	1 700	1 700	1 700	1 700
Maximum input speed S5		n_{1max}	[rpm]	2 000	3 100	3 100	3 100	3 100	3 100
Emergency stop torque d)		T_{2not}	[Nm]	8 500	8 500	8 500	8 500	8 500	8 500
Efficiency		η	[%]	96	93				
Lifetime		L_h	[h]	> 20 000					
Weight		M	[kg]	70	90				
Angular backlash		j_t	[arcmin]	Precision **P 1** ≤ 1 / **P 3** ≤ 3 / **P 5** ≤ 5 / **P 12** ≤12					
Torsionnal rigidity e)		C_{t2}	[Nm/arcmin]	718.8	593.5	611.0	628.5	611.0	611.0
Noise i)		L_{pA}	[dB(A)]	≤ 73					
Max. permitted housing temperature g)		T	[°C]	90					
Protection class				IP 65					
Direction of rotation				Same way input / output					
Max. radial force on output shaft f)		F_{rmax}	[N]	Center of output shaft: 37 500 / End of output shaft: 25 000					
Max. axial force on output shaft f)		F_{amax}	[N]	34 000					
Color				Red, RAL 3003					
Inertia in kg.cm² h)	Ø24	J_1	[kgcm²]	83.3	79.1	74.9	73.3	34.0	22.9
	Ø32			85.5	81.3	77.1	75.5	36.2	25.1
	Ø35			90.8	86.6	82.4	80.8	41.5	30.4
	Ø38			94.2	90.0	85.8	84.2	44.9	33.8
	Ø42			93.7	89.5	85.3	83.7	44.4	33.3
	Ø48			93.9	89.7	85.5	83.9	44.6	33.5
	Ø55			116.5	112.3	108.1	106.5	67.2	56.1

a) Nominal output torque when operating at n_{1N}.
b) 1000 cycles per hour max.
c) Valid for an ambient temperature of 20°C and T_{2N}. At higher ambient temperatures, please reduce speed.
d) Valid 1000 times the gearbox life.
e) Valid for an input Ø of 55 mm in 1-stage and 48 mm in 2- and 3-stage.
f) Values for 300 rpm.
g) For other temperatures, please contact us. Nominal output torque when operating at n_{1N}.
h) Depending on the motor output shaft Ø.
i) With n_{1N}=1800 rpm no load.

Rack

			Pinion 1			Pinion 2		
			Q6	Q7	Q9	Q6	Q7	Q9
Max acceleration force	F_{2B}	[N]	44 786	29 748	39 992	63 300	-	59 005
Max acceleration torque	T_{2B}	[Nm]	2 851	1 894	2 546	4 030	-	3 756
Precision			P1		P12	P1		P12
Feed force			High	Medium	Elevated	High	Medium	Elevated

Above values for rack and pinion take into consideration a number of load cycles: 1×10^6 for the rack; 1×10^7 for the pinion. Both in pulsating operation.

For proper sizing follow flowchart **calculate your ideal drive train** on pages 136 et seq.

More on the technical datasheets **your ideal drive train** on pages 120 et seq.

Input

A	for motor shaft	L ≤ 85	24 ≤ Ød ≤ 48	result in **LA**
B	for motor shaft	85 < L ≤ 115	48 < Ød ≤ 55	result in **LB**

Output

Standard

0

		1-stage	2-stage	3-stage
LA	[mm]	229	300	371
LB	[mm]	259	330	

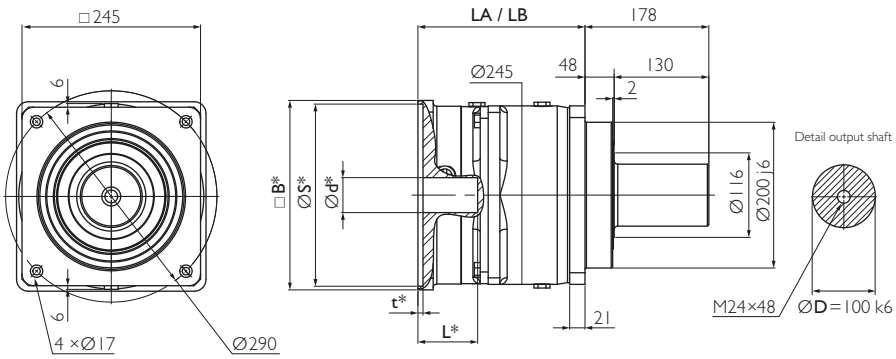

* depending on the motor. See pages 130 et seq.

1

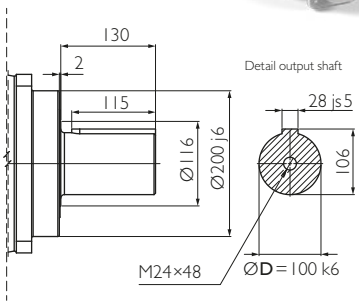

2

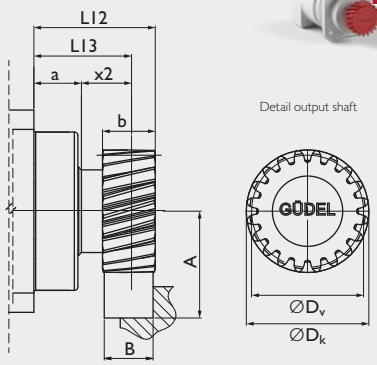

Optional

3

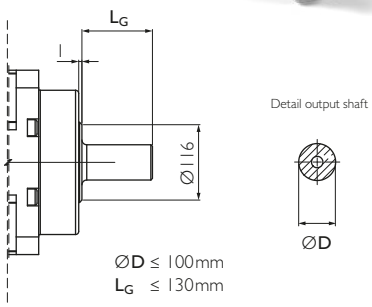

Option 3 on request. Adjustments can reduce capacity.

4

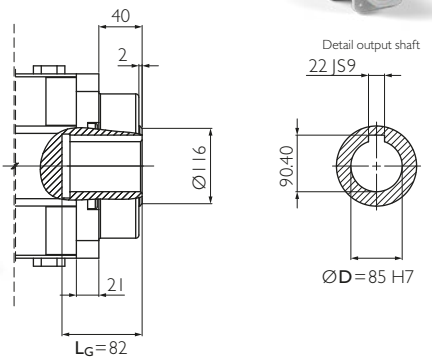

5

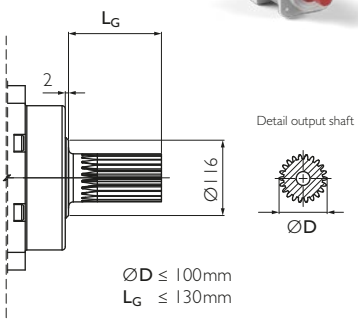

Option 5 on request. Adjustments can reduce capacity.

Example SR 240 B2, 1-stage

Your ideal drive train

Function Package with gearbox, rack and pinion from Güdel

Material	16MnCr5 DIN 1.7131
Teeth	pressure angle α = 20°, helical teeth left, 19°31'42" hardened (58$^{+4}_{0}$ HRC), ground, crowned
Quality	6f24 DIN 3962 / 63 / 67

Pinion

		m_n	P_t	z	A	b	D_k	D_0	D_v	L12	L13	x2	a	M
Pinion 1	[-]	5	16.66	24	97.662	50	137.32	127.324	127.324	120.5	95.5	47.5	48	5.4
Pinion 2	[-]	6	20.00	20	106.662	60	139.32	127.324	127.324	119.0	89.0	41.0	48	5.6

m_n: Normal module, P_t: Transverse pitch [mm], z: Number of teeth, D_0: Pitch circle diameter for calculation, D_v: Pitch circle diameter for design, M: Weight [kg]

Available ratios *		i		3-stage									
				60	80	100	112	120	140	160	200	280	400
Nominal torque S5 a)		T_{2N}	[Nm]	3 600	3 600	3 600	3 600	3 600	3 600	3 600	3 600	3 600	3 600
Acceleration torque S5 b)		T_{2B}	[Nm]	4 800	4 800	4 800	4 800	4 800	4 800	4 800	4 800	4 800	4 800
Nominal input speed S5 c)		n_{1N}	[rpm]	2 100	2 100	2 100	2 100	2 100	2 100	2 100	2 100	2 100	2 100
Maximum input speed S5		n_{1max}	[rpm]	3 100	3 100	3 100	3 100	3 100	3 100	3 100	3 100	3 100	3 100
Emergency stop torque d)		T_{2not}	[Nm]	8 500	8 500	8 500	8 500	8 500	8 500	8 500	8 500	8 500	8 500
Efficiency		η	[%]	90									
Lifetime		L_h	[h]	> 20 000									
Weight		M	[kg]	110									
Angular backlash		j_t	[arcmin]	Precision **P 1** ≤ 1 / **P 3** ≤ 3 / **P 5** ≤ 5 / **P 12** ≤12									
Torsionnal rigidity e)		C_{t2}	[Nm/arcmin]	532.4	532.4	593.5	550.0	550.0	564.5	550.0	564.5	550.0	561.5
Noise i)		L_{pA}	[dB(A)]	≤ 73									
Max. permitted housing temperature g)		T	[°C]	90									
Protection class				IP 65									
Direction of rotation				Same way input / output									
Max. radial force on output shaft f)		F_{rmax}	[N]	Center of output shaft: 37 500 / End of output shaft: 25 000									
Max. axial force on output shaft f)		F_{amax}	[N]	34 000									
Color				Red, RAL 3003									
Inertia in kg.cm² h)	Ø24	J_1	[kgcm²]	78.0	74.2	22.3	33.9	23.4	33.9	22.8	22.8	22.4	22.3
	Ø32			80.2	76.4	24.5	36.1	25.6	36.1	25.0	25.0	24.6	24.5
	Ø35			85.5	81.7	29.8	41.4	30.9	41.4	30.3	30.3	29.9	29.8
	Ø38			88.9	85.1	33.2	44.8	34.3	44.8	33.7	33.7	33.3	33.2
	Ø42			88.4	84.6	32.7	44.3	33.8	44.3	33.2	33.2	32.8	32.7
	Ø48			88.6	84.8	32.9	44.5	34.0	44.5	33.4	33.4	33.0	32.9
	Ø55			111.2	107.4	55.5	67.1	56.6	67.1	56.0	56.0	55.6	55.5

* Other ratios available. 36, 64, 84, 180, 196, 300, 360, 500, 600, 700, 1 000 on request.

a) Nominal output torque when operating at n_{1N}.

b) 1000 cycles per hour max.

c) Valid for an ambient temperature of 20°C and T_{2N}. At higher ambient temperatures, please reduce speed.

d) Valid 1000 times the gearbox life.

e) Valid for an input Ø of 55 mm in 1-stage and 48 mm in 2- and 3-stage.

f) Values for 300 rpm.

g) For other temperatures, please contact us. Nominal output torque when operating at n_{1N}.

h) Depending on the motor output shaft Ø.

i) With n_{1N}=1800 rpm no load.

Rack

			Pinion 1			Pinion 2		
			Q6	Q7	Q9	Q6	Q7	Q9
Max acceleration force	F_{2B}	[N]	44 786	29 748	39 992	63 300	-	59 005
Max acceleration torque	T_{2B}	[Nm]	2 851	1 894	2 546	4 030	-	3 756
Precision			P1		P12	P1		P12
Feed force			High	Medium	Elevated	High	Medium	Elevated

Above values for rack and pinion take into consideration a number of load cycles: 1×10^6 for the rack; 1×10^7 for the pinion. Both in pulsating operation.

For proper sizing follow flowchart **calculate your ideal drive train** on pages 136 et seq.

More on the technical datasheets **your ideal drive train** on pages 120 et seq.

Input

A	for motor shaft	L ≤ 45	6 ≤ Ød ≤ 19	result in **LA**
B	for motor shaft	45 < L ≤ 55	19 < Ød ≤ 24	result in **LB**

		1-stage	2-stage	3-stage
LA	[mm]	106.5	128.5	150.5
LB	[mm]	116	138	160

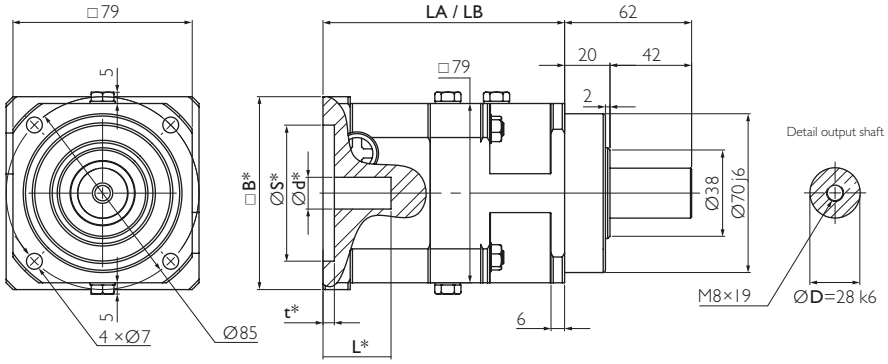

* depending on the motor. See pages 130 et seq.

Example PR 080 B0, 1-stage

Output

Standard

0

1

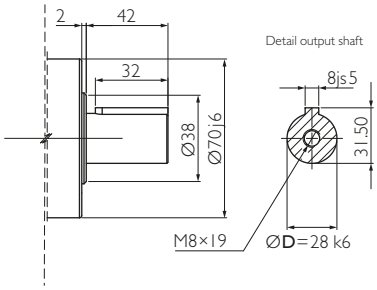

2

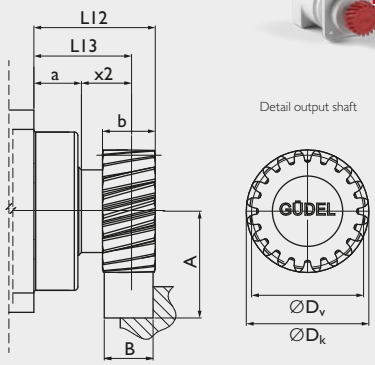

Optional

3

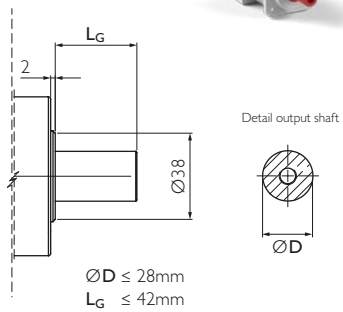

Option 3 on request. Adjustments can reduce capacity.

4

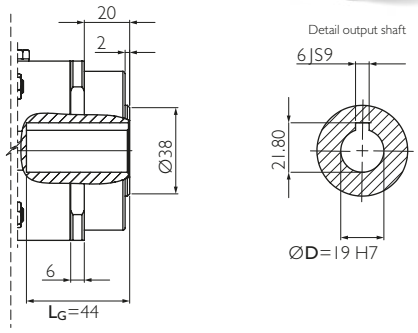

5

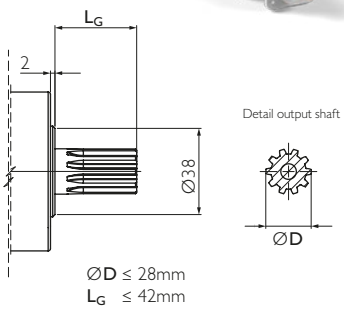

Option 5 on request. Adjustments can reduce capacity.

Your ideal drive train

Function Package with gearbox, rack and pinion from Güdel

Material	16MnCr5 DIN 1.7131
Teeth	pressure angle α = 20°, helical teeth left, 19°31'42" hardened (58$^{+4}_{0}$ HRC), ground, crowned
Quality	6f24 DIN 3962 / 63 / 67

Pinion

Pinion for PR on request

Available ratios		i		1-stage	2-stage				
				3	9	12	15	21	30
Nominal torque S5 a)		T_{2N}	[Nm]	120	120	120	120	120	120
Acceleration torque S5 b)		T_{2B}	[Nm]	160	160	160	160	160	160
Nominal input speed S5 c)		n_{1N}	[rpm]	2 300	2 300	2 600	2 800	2 800	2 800
Maximum input speed S5		n_{1max}	[rpm]	4 000	4 000	4 800	4 800	4 800	4 800
Emergency stop torque d)		T_{2not}	[Nm]	210	200	200	200	200	200
Efficiency		η	[%]	94	91				
Lifetime		L_h	[h]	> 20 000					
Weight		M	[kg]	4	5				
Angular backlash		j_t	[arcmin]	Precision **P 1** ≤ 1 / **P 3** ≤ 3 / **P 5** ≤ 5 / **P 12** ≤12					
Torsionnal rigidity e)		C_{t2}	[Nm/arcmin]	12.2	11.6	12.2	11.6	11.6	11.6
Noise i)		L_{pA}	[dB(A)]	≤ 70					
Max. permitted housing temperature g)		T	[°C]	90					
Protection class				IP 65					
Direction of rotation				Same way input / output					
Max. radial force on output shaft f)		F_{rmax}	[N]	Center of output shaft: 4 200 / End of output shaft: 3 285					
Max. axial force on output shaft f)		F_{amax}	[N]	3 600					
Color				Red, RAL 3003					
Inertia in kg.cm² h)	Ø11	J_1	[kgcm²]	0.62	0.62	0.46	0.40	0.34	0.31
	Ø14			1.18	1.17	1.01	0.95	0.90	0.86
	Ø19			1.19	1.19	1.03	0.96	0.91	0.88
	Ø24			2.01	2.00	1.84	1.78	1.73	1.69

a) Nominal output torque when operating at n_{1N}.
b) 1000 cycles per hour max.
c) Valid for an ambient temperature of 20°C and T_{2N}. At higher ambient temperatures, please reduce speed.
d) Valid 1000 times the gearbox life.
e) Valid for an input Ø of 19mm in 1-stage and 14mm in 2- and 3-stage.
f) Values for 300 rpm.
g) For other temperatures, please contact us. Nominal output torque when operating at n_{1N}.
h) Depending on the motor output shaft Ø.
i) With n_{1N}=2500 rpm no load.

Rack

Rack for PR on request

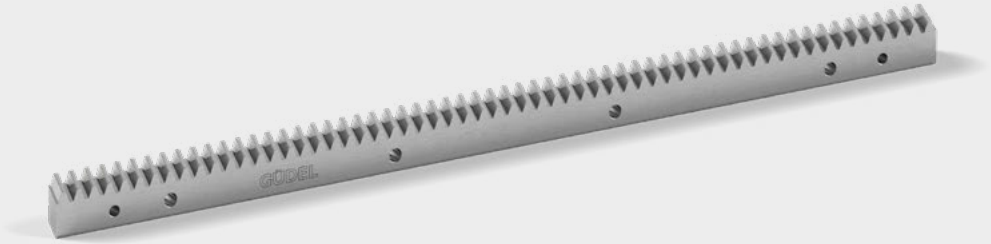

Input

A	for motor shaft	L ≤ 45	6 ≤ Ød ≤ 19	result in **LA**
B	for motor shaft	45 < L ≤ 55	19 < Ød ≤ 24	result in **LB**

		1-stage	2-stage	3-stage
LA	[mm]	106.5	128.5	150.5
LB	[mm]	116	138	160

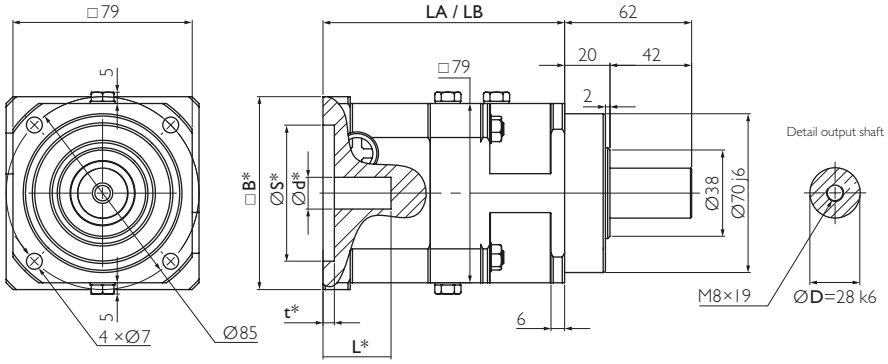

* depending on the motor. See pages 130 et seq.

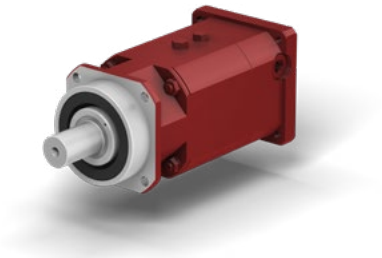

Example PR 080 A0, 3-stage

Output

Standard

0

1

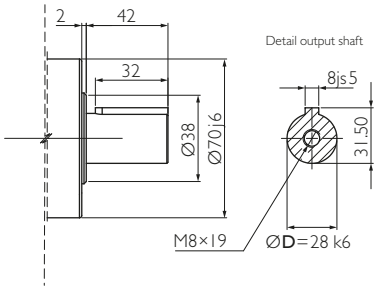

2

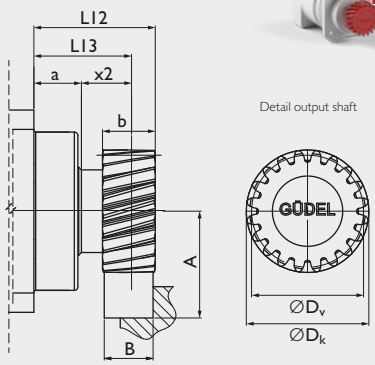

Optional

3

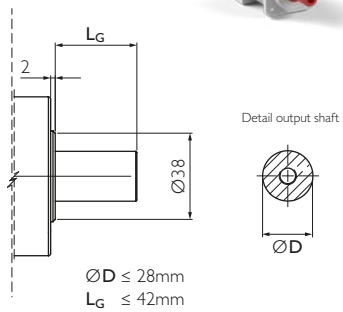

Option 3 on request. Adjustments can reduce capacity.

4

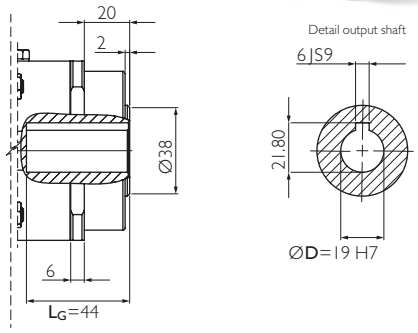

5

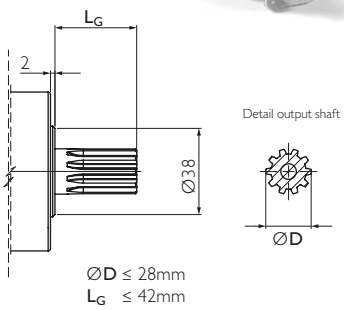

Option 5 on request. Adjustments can reduce capacity.

Your ideal drive train

Function Package with gearbox, rack and pinion from Güdel

Material	16MnCr5 DIN 1.7131
Teeth	pressure angle α = 20°, helical teeth left, 19°31'42" hardened (58$^{+4}_{0}$ HRC), ground, crowned
Quality	6f24 DIN 3962 / 63 / 67

Pinion

Pinion for PR on request

Available ratios *		i		3-stage									
				36	45	60	75	90	105	120	150	210	300
Nominal torque S5 a)		T_{2N}	[Nm]	120	120	120	120	120	120	120	120	120	120
Acceleration torque S5 b)		T_{2B}	[Nm]	160	160	160	160	160	160	160	160	160	160
Nominal input speed S5 c)		n_{1N}	[rpm]	3 000	3 600	3 600	3 600	3 600	3 600	3 600	3 600	3 600	3 600
Maximum input speed S5		n_{1max}	[rpm]	4 800	4 800	4 800	4 800	4 800	4 800	4 800	4 800	4 800	4 800
Emergency stop torque d)		T_{2not}	[Nm]	200	200	200	200	200	200	200	200	200	200
Efficiency		η	[%]	88									
Lifetime		L_h	[h]	> 20 000									
Weight		M	[kg]	6									
Angular backlash		j_t	[arcmin]	Precision **P 1** ≤ 1 / **P 3** ≤ 3 / **P 5** ≤ 5 / **P 12** ≤12									
Torsionnal rigidity e)		C_{t2}	[Nm/arcmin]	11.6	11.6	11.8	11.8	11.1	11.8	11.6	11.8	11.9	11.1
Noise i)		L_{pA}	[dB(A)]	≤ 71									
Max. permitted housing temperature g)		T	[°C]	90									
Protection class				IP 65									
Direction of rotation				Same way input / output									
Max. radial force on output shaft f)		F_{rmax}	[N]	Center of output shaft: 4 200 / End of output shaft: 3 285									
Max. axial force on output shaft f)		F_{amax}	[N]	3 600									
Color				Red, RAL 3003									
Inertia in kg.cm² h)	Ø11	J_1	[kgcm²]	0.46	0.40	0.46	0.40	0.31	0.34	0.31	0.31	0.31	0.31
	Ø14			1.01	0.95	1.01	0.95	0.86	0.90	0.86	0.86	0.86	0.86
	Ø19			1.03	0.96	1.03	0.96	0.88	0.91	0.88	0.88	0.88	0.88
	Ø24			1.84	1.78	1.84	1.78	1.69	1.73	1.69	1.69	1.69	1.69

* Other ratios available. 27, 48, 63, 84, 147 on request.

a) Nominal output torque when operating at n_{1N}.

b) 1000 cycles per hour max.

c) Valid for an ambient temperature of 20°C and T_{2N}. At higher ambient temperatures, please reduce speed.

d) Valid 1000 times the gearbox life.

e) Valid for an input Ø of 19 mm in 1-stage and 14 mm in 2- and 3-stage.

f) Values for 300 rpm.

g) For other temperatures, please contact us. Nominal output torque when operating at n_{1N}.

h) Depending on the motor output shaft Ø.

i) With n_{1N}=2500 rpm no load.

Rack

Rack for PR on request

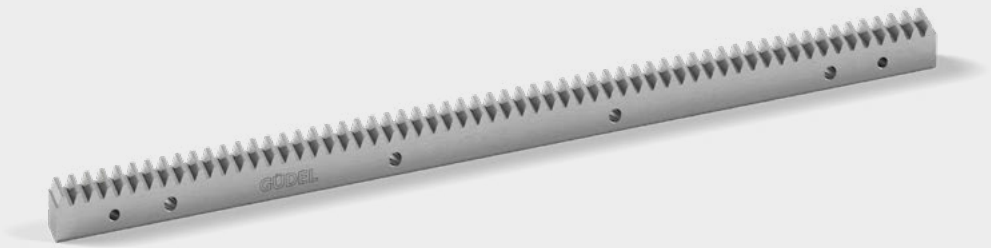

Input

A	for motor shaft	L ≤ 50	9 ≤ Ød ≤ 24	result in **LA**
B	for motor shaft	51 < L ≤ 64	24 < Ød ≤ 35	result in **LB**

		1-stage	2-stage	3-stage
LA	[mm]	126	164	202
LB	[mm]	140	178	216

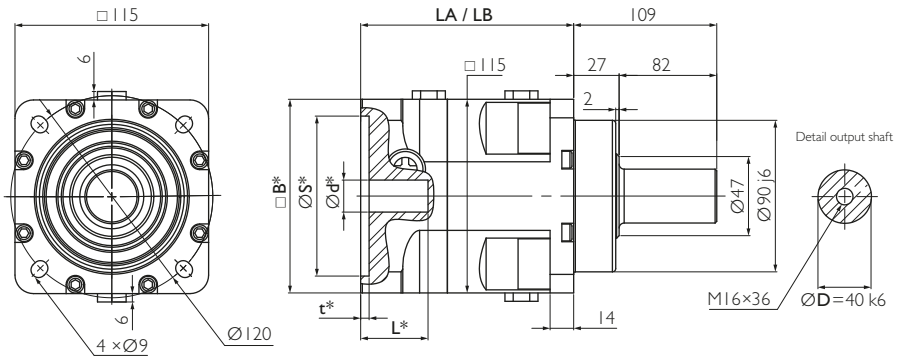

* depending on the motor. See pages 130 et seq.

Output

Standard

0

1

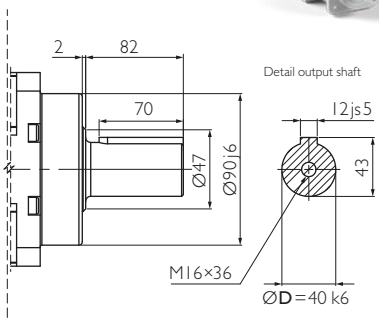

2

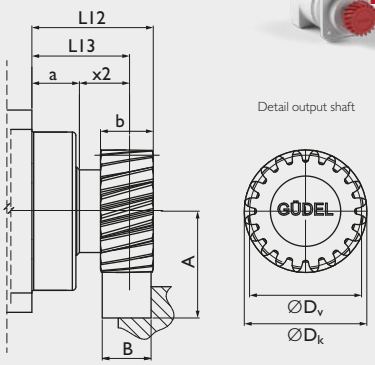

Optional

3

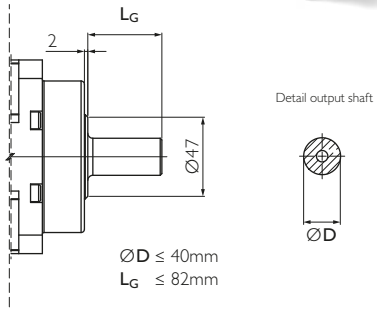

Option 3 on request. Adjustments can reduce capacity.

4

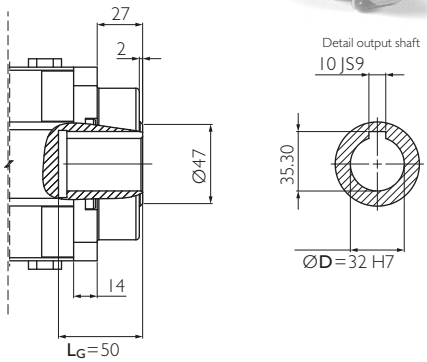

5

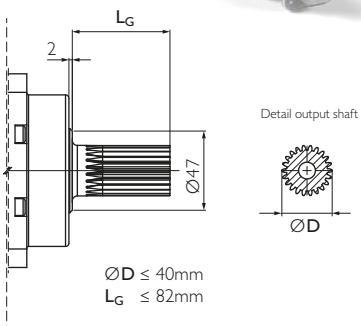

Option 5 on request. Adjustments can reduce capacity.

Example PR 100 A5, 1-stage

Material	16MnCr5 DIN 1.7131
Teeth	pressure angle α = 20°, helical teeth left, 19°31'42" hardened (58^{+4}_{0} HRC), ground, crowned
Quality	6f24 DIN 3962 / 63 / 67

Your ideal drive train

Function Package with gearbox, rack and pinion from Güdel

Pinion

Pinion for PR on request

Available ratios		i		1-stage	2-stage				
				3	9	12	15	21	30
Nominal torque S5 [a]		T_{2N}	[Nm]	348	350	350	350	350	350
Acceleration torque S5 [b]		T_{2B}	[Nm]	556	500	500	500	500	500
Nominal input speed S5 [c]		n_{1N}	[rpm]	2 000	2 000	2 300	2 500	2 500	2 500
Maximum input speed S5		n_{1max}	[rpm]	3 200	3 200	3 600	3 600	3 600	3 600
Emergency stop torque [d]		T_{2not}	[Nm]	870	785	785	785	785	785
Efficiency		η	[%]	94	91				
Lifetime		L_h	[h]	> 20 000					
Weight		M	[kg]	8	10				
Angular backlash		j_t	[arcmin]	Precision **P 1** ≤ 1 / **P 3** ≤ 3 / **P 5** ≤ 5 / **P 12** ≤12					
Torsionnal rigidity [e]		C_{t2}	[Nm/arcmin]	37.0	35.2	35.2	35.2	35.2	35.2
Noise [i]		L_{pA}	[dB(A)]	≤ 71					
Max. permitted housing temperature [g]		T	[°C]	90					
Protection class				IP 65					
Direction of rotation				Same way input / output					
Max. radial force on output shaft [f]		F_{rmax}	[N]	Center of output shaft: 6 600 / End of output shaft: 4 300					
Max. axial force on output shaft [f]		F_{amax}	[N]	6 000					
Color				Red, RAL 3003					
Inertia in kg.cm² [h]	Ø14	J_1	[kgcm²]	4.08	3.97	2.76	2.33	1.86	1.61
	Ø19			4.08	3.97	2.76	2.33	1.86	1.61
	Ø24			4.09	3.98	2.77	2.34	1.87	1.62
	Ø32			7.29	7.18	5.97	5.54	5.07	4.82
	Ø35			9.9	9.81	8.60	8.17	7.70	7.45

a) Nominal output torque when operating at n_{1N}.
b) 1000 cycles per hour max.
c) Valid for an ambient temperature of 20°C and T_{2N}. At higher ambient temperatures, please reduce speed.
d) Valid 1000 times the gearbox life.
e) Valid for an input Ø of 24 mm in 1-stage and 19 mm in 2- and 3-stage.
f) Values for 300 rpm.
g) For other temperatures, please contact us. Nominal output torque when operating at n_{1N}.
h) Depending on the motor output shaft Ø.
i) With n_{1N}=2500 rpm no load.

Rack

Rack for PR on request

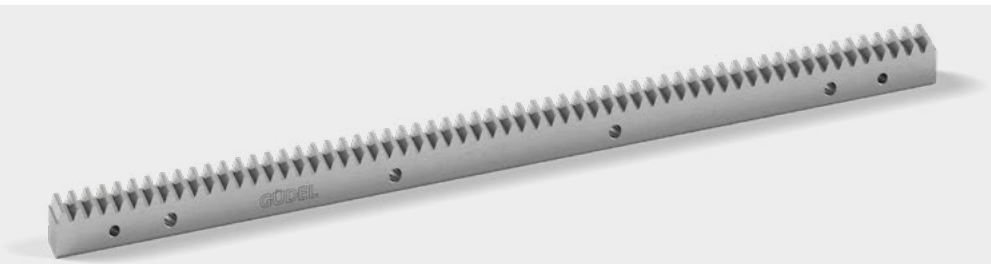

Input

A	for motor shaft	L ≤ 50	9 ≤ Ød ≤ 24	result in **LA**
B	for motor shaft	51 < L ≤ 64	24 < Ød ≤ 35	result in **LB**

Output

Standard

0

		1-stage	2-stage	3-stage
LA	[mm]	126	164	202
LB	[mm]	140	178	216

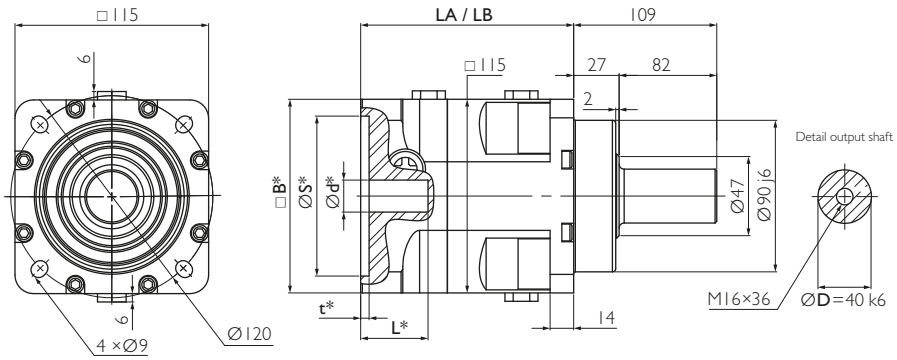

* depending on the motor. See pages 130 et seq.

1

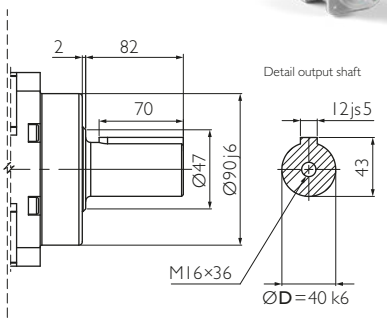

2

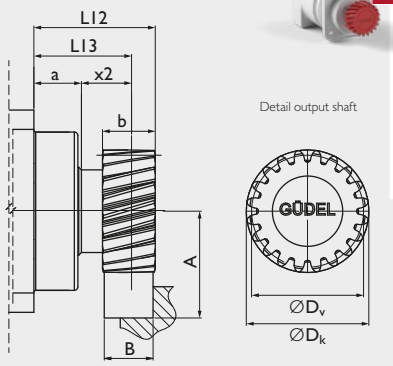

Optional

3

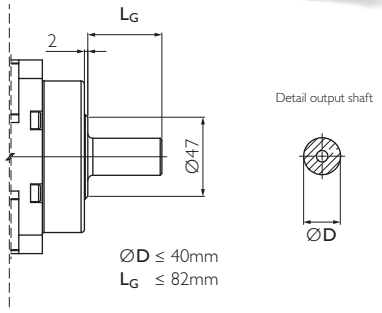

Option 3 on request. Adjustments can reduce capacity.

4

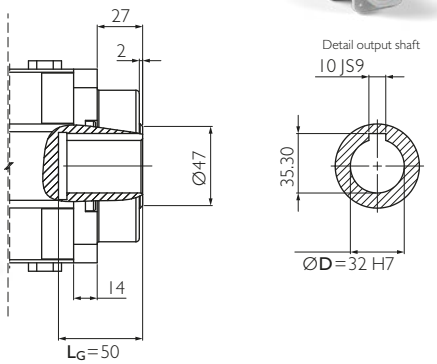

5

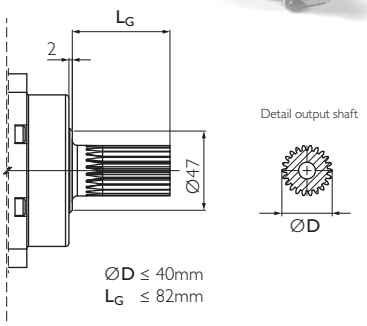

Option 5 on request. Adjustments can reduce capacity.

Example PR 100 A0, 3-stage

Your ideal drive train

Function Package with gearbox, rack and pinion from Güdel

Material	16MnCr5 DIN 1.7131
Teeth	pressure angle α = 20°, helical teeth left, 19°31'42" hardened (58^{+4}_{0} HRC), ground, crowned
Quality	6f24 DIN 3962 / 63 / 67

Pinion

Pinion for PR on request

Available ratios *		i		3-stage									
				36	45	60	75	90	105	120	150	210	300
Nominal torque S5 a)		T_{2N}	[Nm]	350	350	350	350	350	350	350	350	350	350
Acceleration torque S5 b)		T_{2B}	[Nm]	500	500	500	500	500	500	500	500	500	500
Nominal input speed S5 c)		n_{1N}	[rpm]	2 700	3 300	3 300	3 300	3 300	3 300	3 300	3 300	3 300	3 300
Maximum input speed S5		n_{1max}	[rpm]	4 000	4 000	4 000	4 000	4 000	4 000	4 000	4 000	4 000	4 000
Emergency stop torque d)		T_{2not}	[Nm]	785	785	785	785	785	785	785	785	785	785
Efficiency		η	[%]	88									
Lifetime		L_h	[h]	> 20 000									
Weight		M	[kg]	12									
Angular backlash		j_t	[arcmin]	Precision **P 1** ≤ 1 / **P 3** ≤ 3 / **P 5** ≤ 5 / **P 12** ≤12									
Torsionnal rigidity e)		C_{t2}	[Nm/arcmin]	33.5	33.5	42.2	42.2	33.5	42.2	40.4	42.2	43.1	40.4
Noise i)		L_{pA}	[dB(A)]	≤ 71									
Max. permitted housing temperature g)		T	[°C]	90									
Protection class				IP 65									
Direction of rotation				Same way input / output									
Max. radial force on output shaft f)		F_{rmax}	[N]	Center of output shaft: 6 600 / End of output shaft: 4 300									
Max. axial force on output shaft f)		F_{amax}	[N]	6 000									
Color				Red, RAL 3003									
Inertia in kg.cm² h)	Ø14	J_1	[kgcm²]	2.76	2.28	2.23	2.21	1.61	1.82	1.60	1.59	1.59	1.59
	Ø19			2.76	2.28	2.23	2.21	1.61	1.82	1.60	1.59	1.59	1.59
	Ø24			2.77	2.29	2.24	2.22	1.62	1.83	1.61	1.60	1.60	1.60
	Ø32			5.97	5.49	5.44	5.42	4.82	5.03	4.81	4.80	4.80	4.80
	Ø35			8.60	8.12	8.07	8.05	7.45	7.66	7.44	7.43	7.43	7.43

* Other ratios available. 27, 48, 63, 84, 147 on request.

a) Nominal output torque when operating at n_{1N}.

b) 1000 cycles per hour max.

c) Valid for an ambient temperature of 20°C and T_{2N}. At higher ambient temperatures, please reduce speed.

d) Valid 1000 times the gearbox life.

e) Valid for an input Ø of 24 mm in 1-stage and 19 mm in 2- and 3-stage.

f) Values for 300 rpm.

g) For other temperatures, please contact us. Nominal output torque when operating at n_{1N}.

h) Depending on the motor output shaft Ø.

i) With n_{1N}=2500 rpm no load.

Rack

Rack for PR on request

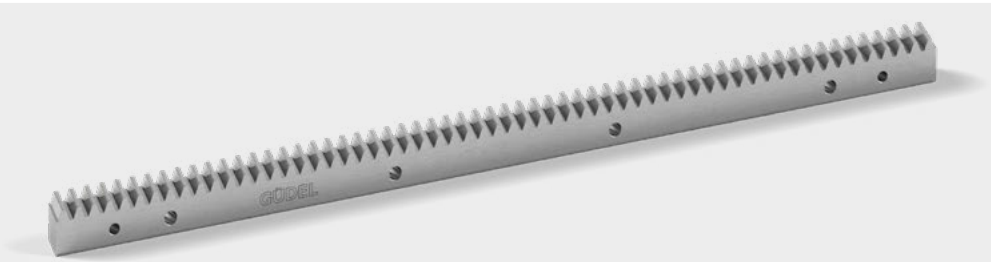

Input

A	for motor shaft	L ≤ 51	14 ≤ Ød ≤ 24	result in **LA**
B	for motor shaft	51 < L ≤ 63	24 < Ød ≤ 35	result in **LB**
C	for motor shaft	63 < L ≤ 83	24 < Ød ≤ 42	result in **LC**

		1-stage	2-stage	3-stage
LA	[mm]	143	185	227
LB	[mm]	155	197	239
LC	[mm]	175	217	

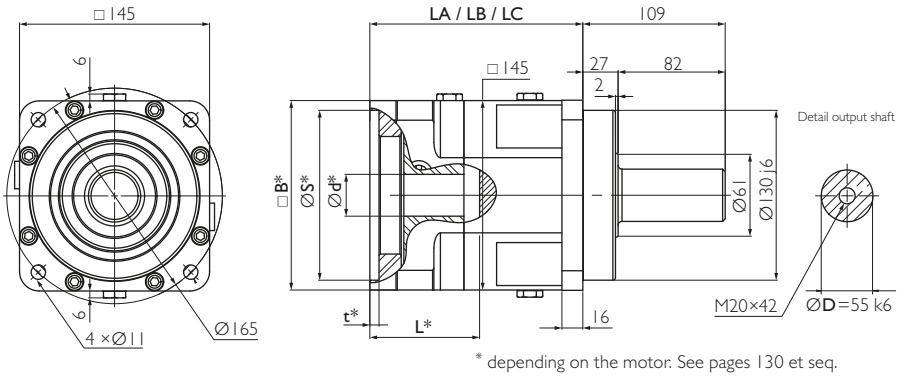

* depending on the motor. See pages 130 et seq.

Output

Standard

0

1

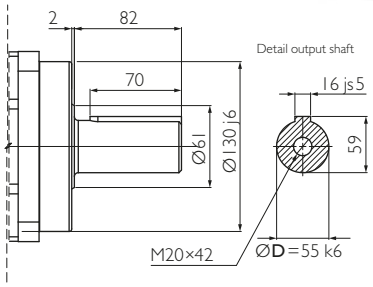

2

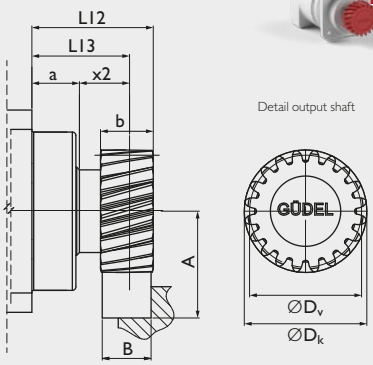

Optional

3

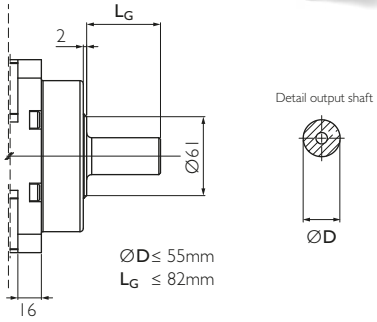

Option 3 on request. Adjustments can reduce capacity.

4

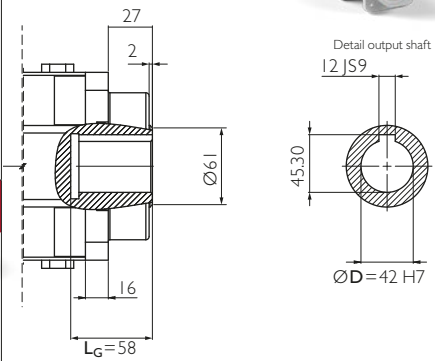

5

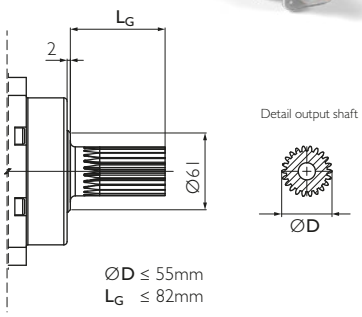

Option 5 on request. Adjustments can reduce capacity.

Example PR 140 A1, 1-stage

Your ideal drive train

Function Package with gearbox, rack and pinion from Güdel

Material	16MnCr5 DIN 1.7131
Teeth	pressure angle α = 20°, helical teeth left, 19°31'42" hardened (58$^{+4}_{0}$ HRC), ground, crowned
Quality	6f24 DIN 3962 / 63 / 67

Pinion

Pinion for PR on request

Available ratios		i		1-stage	2-stage				
				3	9	12	15	21	30
Nominal torque S5 a)		T_{2N}	[Nm]	700	700	700	700	700	700
Acceleration torque S5 b)		T_{2B}	[Nm]	900	900	900	900	900	900
Nominal input speed S5 c)		n_{1N}	[rpm]	1 500	1 600	2 500	2 500	2 500	2 500
Maximum input speed S5		n_{1max}	[rpm]	2 500	2 600	3 200	3 200	3 200	3 200
Emergency stop torque d)		T_{2not}	[Nm]	1 250	1 250	1 250	1 250	1 250	1 250
Efficiency		η	[%]	94	91				
Lifetime		L_h	[h]	> 20 000					
Weight		M	[kg]	14	18				
Angular backlash		j_t	[arcmin]	Precision **P 1** ≤ 1 / **P 3** ≤ 3 / **P 5** ≤ 5 / **P 12** ≤12					
Torsionnal rigidity e)		C_{t2}	[Nm/arcmin]	103.3	93.1	93.1	93.1	93.1	93.1
Noise i)		L_{pA}	[dB(A)]	≤ 71					
Max. permitted housing temperature g)		T	[°C]	90					
Protection class				IP 65					
Direction of rotation				Same way input / output					
Max. radial force on output shaft f)		F_{rmax}	[N]	Center of output shaft: 9 950 / End of output shaft: 6 700					
Max. axial force on output shaft f)		F_{amax}	[N]	10 300					
Color				Red, RAL 3003					
Inertia in kg.cm² h)	Ø14	J_1	[kgcm²]	10.98	10.53	6.86	5.44	4.23	3.52
	Ø19			10.98	10.53	6.86	5.44	4.23	3.52
	Ø24			11.99	11.54	7.87	6.45	5.24	4.53
	Ø32			14.19	13.74	10.07	8.65	7.44	6.73
	Ø35			17.02	16.57	12.90	11.48	10.27	9.56
	Ø38			22.21	21.76	18.09	16.67	15.46	14.75
	Ø42			21.81	21.36	17.69	16.27	15.06	14.35

a) Nominal output torque when operating at n_{1N}.
b) 1000 cycles per hour max.
c) Valid for an ambient temperature of 20°C and T_{2N}. At higher ambient temperatures, please reduce speed.
d) Valid 1000 times the gearbox life.
e) Valid for an input Ø of 38 mm in 1-stage and 24 mm in 2- and 3-stage.
f) Values for 300 rpm.
g) For other temperatures, please contact us. Nominal output torque when operating at n_{1N}.
h) Depending on the motor output shaft Ø.
i) With n_{1N}=2500 rpm no load.

Rack

Rack for PR on request

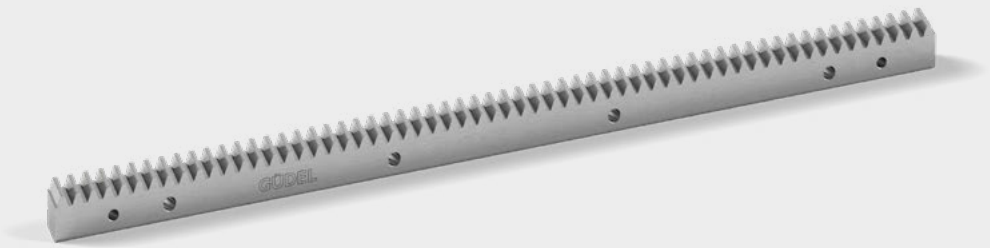

Input

A	for motor shaft	L ≤ 51	14 ≤ Ød ≤ 24	result in **LA**
B	for motor shaft	51 < L ≤ 63	24 < Ød ≤ 35	result in **LB**
C	for motor shaft	63 < L ≤ 83	24 < Ød ≤ 42	result in **LC**

		1-stage	2-stage	3-stage
LA	[mm]	143	185	227
LB	[mm]	155	197	239
LC	[mm]	175	217	

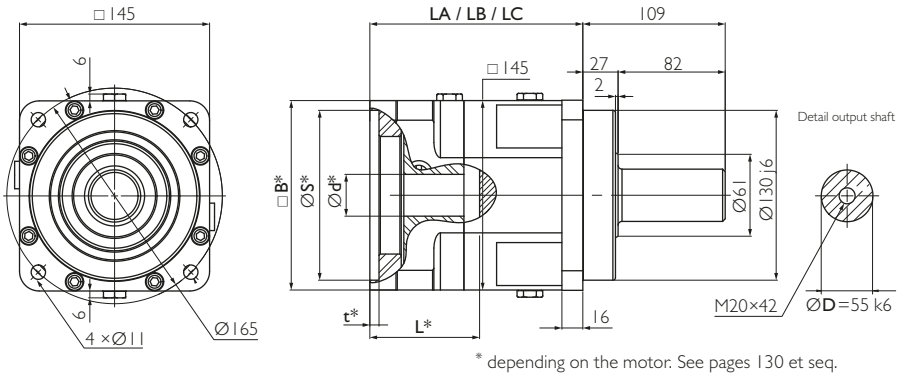

* depending on the motor. See pages 130 et seq.

Output

Standard

Example PR 140 A5, 1-stage

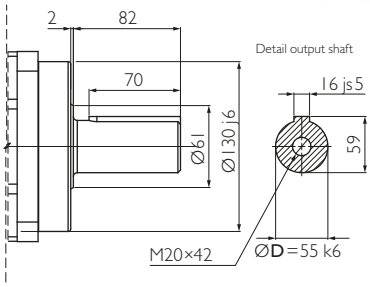

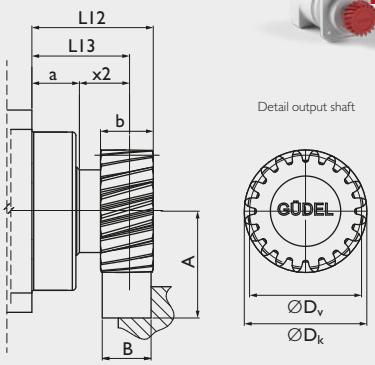

Optional

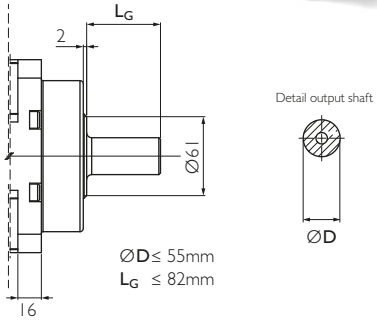

Option 3 on request. Adjustments can reduce capacity.

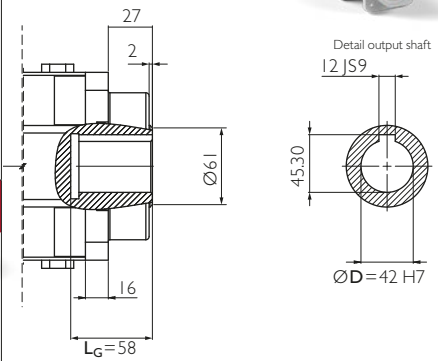

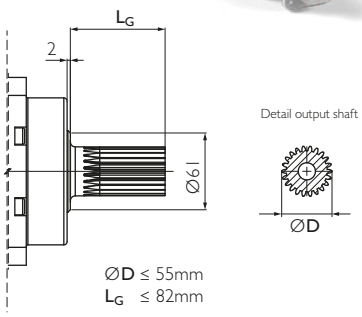

Option 5 on request. Adjustments can reduce capacity.

Material	16MnCr5 DIN 1.7131
Teeth	pressure angle α = 20°, helical teeth left, 19°31'42" hardened (58^{+4}_{0} HRC), ground, crowned
Quality	6f24 DIN 3962 / 63 / 67

Your ideal drive train

Function Package with gearbox, rack and pinion from Güdel

Pinion

Pinion for PR on request

Available ratios *		i		3-stage									
				36	45	60	75	90	105	120	150	210	300
Nominal torque S5 a)		T_{2N}	[Nm]	700	700	700	700	700	700	700	700	700	700
Acceleration torque S5 b)		T_{2B}	[Nm]	900	900	900	900	900	900	900	900	900	900
Nominal input speed S5 c)		n_{1N}	[rpm]	2 200	2 900	2 900	3 500	3 500	3 500	3 500	3 500	3 500	3 500
Maximum input speed S5		n_{1max}	[rpm]	4 000	4 000	4 000	4 000	4 200	4 200	4 200	4 200	4 200	4 200
Emergency stop torque d)		T_{2not}	[Nm]	1 250	1 250	1 250	1 250	1 250	1 250	1 250	1 250	1 250	1 250
Efficiency		η	[%]	88									
Lifetime		L_h	[h]	> 20 000									
Weight		M	[kg]	22									
Angular backlash		j_t	[arcmin]	Precision **P 1** ≤ 1 / **P 3** ≤ 3 / **P 5** ≤ 5 / **P 12** ≤12									
Torsionnal rigidity e)		C_{t2}	[Nm/arcmin]	83.8	83.8	100.4	100.4	83.8	100.4	94.3	100.4	98.6	83.8
Noise i)		L_{pA}	[dB(A)]	≤ 71									
Max. permitted housing temperature g)		T	[°C]	90									
Protection class				IP 65									
Direction of rotation				Same way input / output									
Max. radial force on output shaft f)		F_{rmax}	[N]	Center of output shaft: 9 950 / End of output shaft: 6 700									
Max. axial force on output shaft f)		F_{amax}	[N]	10 300									
Color				Red, RAL 3003									
Inertia in kg.cm² h)	Ø14	J_1	[kgcm²]	6.83	5.42	5.28	5.22	3.51	4.11	3.47	3.46	3.46	3.44
	Ø19			6.83	5.42	5.28	5.22	3.51	4.11	3.47	3.46	3.46	3.44
	Ø24			7.84	6.43	6.29	6.23	4.52	5.12	4.48	4.47	4.47	4.45
	Ø32			10.04	8.63	8.49	8.43	6.72	7.32	6.68	6.67	6.67	6.65
	Ø35			12.87	11.46	11.32	11.26	9.55	10.15	9.51	9.50	9.50	9.48
	Ø38			18.06	16.65	16.51	16.45	14.74	15.34	14.70	14.69	14.69	14.67
	Ø42			17.66	16.25	16.11	16.05	14.34	14.94	14.30	14.29	14.29	14.27

* Other ratios available. 27, 48, 63, 84, 147 on request.

a) Nominal output torque when operating at n_{1N}.

b) 1000 cycles per hour max.

c) Valid for an ambient temperature of 20°C and T_{2N}.
At higher ambient temperatures, please reduce speed.

d) Valid 1000 times the gearbox life.

e) Valid for an input Ø of 38 mm in 1-stage and 24 mm in 2- and 3-stage.

f) Values for 300 rpm.

g) For other temperatures, please contact us. Nominal output torque when operating at n_{1N}.

h) Depending on the motor output shaft Ø.

i) With n_{1N}=2500 rpm no load.

Rack

Rack for PR on request

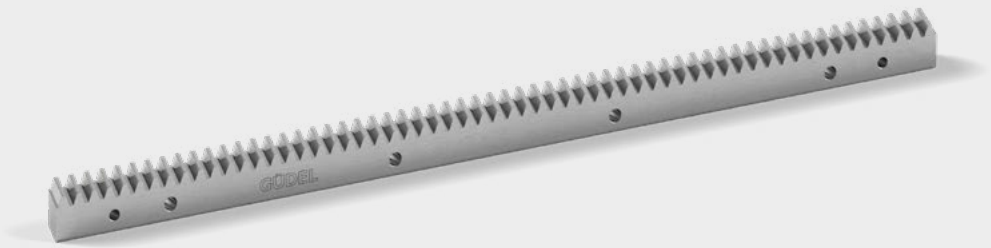

Input

A	for motor shaft	L ≤ 60	19 ≤ Ød ≤ 32	result in **LA**
B	for motor shaft	60 < L ≤ 85	32 < Ød ≤ 48	result in **LB**
C	for motor shaft	85 < L ≤ 111	32 < Ød ≤ 48	result in **LC**

Output

Standard

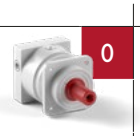

		1-stage	2-stage	3-stage
LA	[mm]	168	220	273
LB	[mm]	193	246	298
LC	[mm]	219	272	

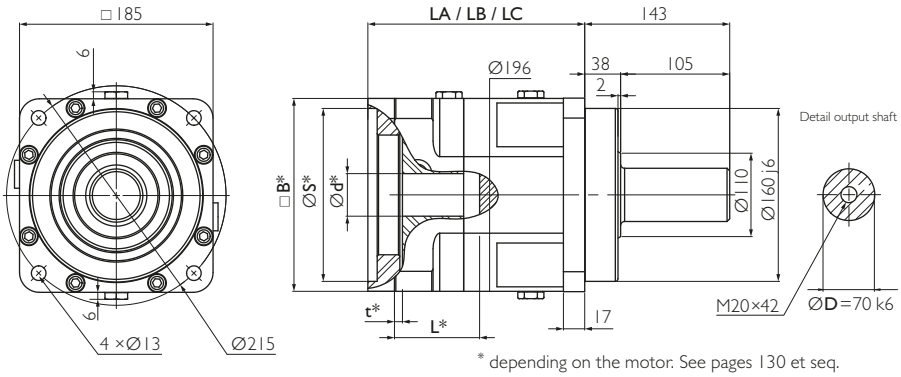

* depending on the motor. See pages 130 et seq.

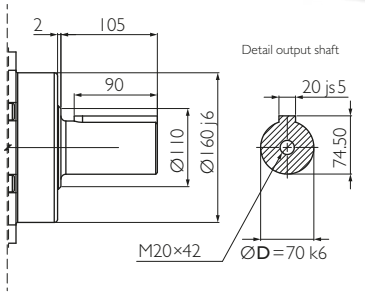

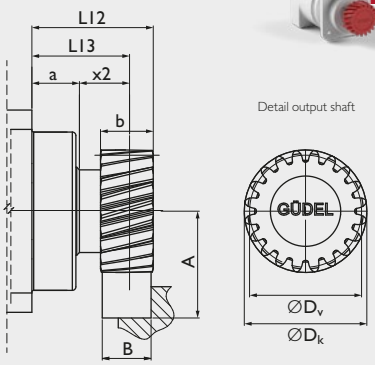

Optional

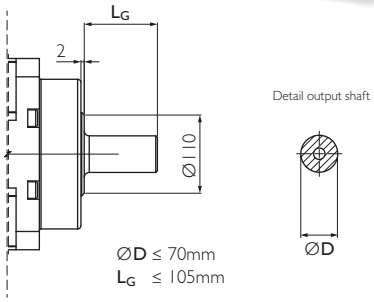

Option 3 on request. Adjustments can reduce capacity.

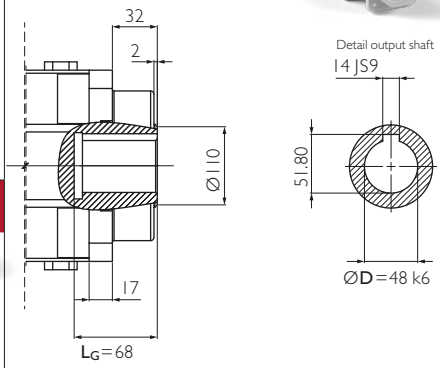

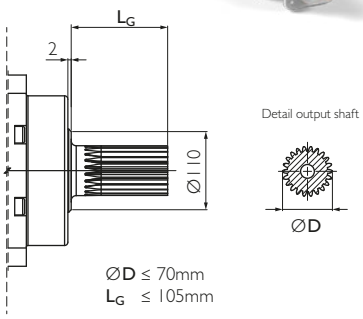

Option 5 on request. Adjustments can reduce capacity.

Example PR 180 A1, 1-stage

Your ideal drive train

Function Package with gearbox, rack and pinion from Güdel

Material	16MnCr5 DIN 1.7131
Teeth	pressure angle α = 20°, helical teeth left, 19°31'42" hardened (58^{+4}_{0} HRC), ground, crowned
Quality	6f24 DIN 3962 / 63 / 67

Pinion

Pinion for PR on request

Available ratios		i		1-stage	2-stage				
				3	9	12	15	21	30
Nominal torque S5 a)		T_{2N}	[Nm]	1 600	1 600	1 600	1 600	1 600	1 600
Acceleration torque S5 b)		T_{2B}	[Nm]	1 925	1 900	1 900	1 900	1 900	1 900
Nominal input speed S5 c)		n_{1N}	[rpm]	1 200	2 000	2 000	2 100	2 100	2 100
Maximum input speed S5		n_{1max}	[rpm]	2 400	2 400	3 200	3 200	3 200	3 200
Emergency stop torque d)		T_{2not}	[Nm]	3 000	3 000	3 000	3 000	3 000	3 000
Efficiency		η	[%]	94	91				
Lifetime		L_h	[h]	> 20 000					
Weight		M	[kg]	32	39				
Angular backlash		j_t	[arcmin]	Precision **P 1** ≤ 1 / **P 3** ≤ 3 / **P 5** ≤ 5 / **P 12** ≤12					
Torsionnal rigidity e)		C_{t2}	[Nm/arcmin]	366.6	349.1	333.4	300.3	281.1	274.1
Noise i)		L_{pA}	[dB(A)]	≤ 72					
Max. permitted housing temperature g)		T	[°C]	90					
Protection class				IP 65					
Direction of rotation				Same way input / output					
Max. radial force on output shaft f)		F_{rmax}	[N]	Center of output shaft: 18 000 / End of output shaft: 13 000					
Max. axial force on output shaft f)		F_{amax}	[N]	20 000					
Color				Red, RAL 3003					
Inertia in kg.cm² h)	Ø19	J_1	[kgcm²]	38.19	38.58	16.57	17.35	12.20	9.22
	Ø24			39.24	39.63	17.62	18.40	13.25	10.27
	Ø32			41.45	41.84	19.83	20.61	15.46	12.48
	Ø35			44.37	44.76	22.75	23.53	18.38	15.40
	Ø38			49.97	50.36	28.35	29.13	23.98	21.00
	Ø42			49.47	49.86	27.85	28.63	23.48	20.50
	Ø48			49.87	50.26	28.25	29.03	23.88	20.90

a) Nominal output torque when operating at n_{1N}.
b) 1000 cycles per hour max.
c) Valid for an ambient temperature of 20°C and T_{2N}. At higher ambient temperatures, please reduce speed.
d) Valid 1000 times the gearbox life.
e) Valid for an input Ø of 48 mm in 1-stage and 38 mm in 2- and 3-stage.
f) Values for 300 rpm.
g) For other temperatures, please contact us. Nominal output torque when operating at n_{1N}.
h) Depending on the motor output shaft Ø.
i) With n_{1N}=2500 rpm no load.

Rack

Rack for PR on request

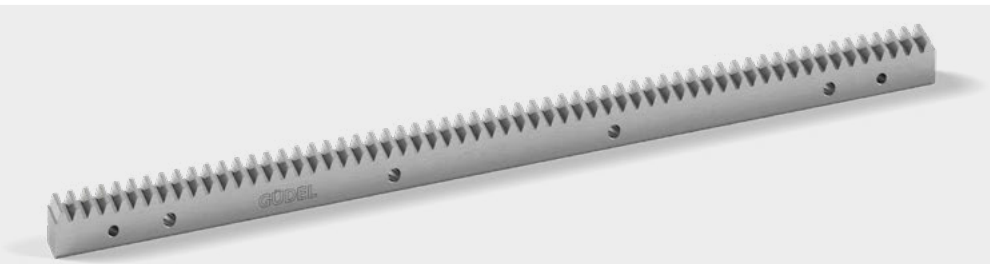

Input

A	for motor shaft	L ≤ 60	19 ≤ Ød ≤ 32	result in LA
B	for motor shaft	60 < L ≤ 85	32 < Ød ≤ 48	result in LB
C	for motor shaft	85 < L ≤ 111	32 < Ød ≤ 48	result in LC

		1-stage	2-stage	3-stage
LA	[mm]	168	220	273
LB	[mm]	193	246	298
LC	[mm]	219	272	

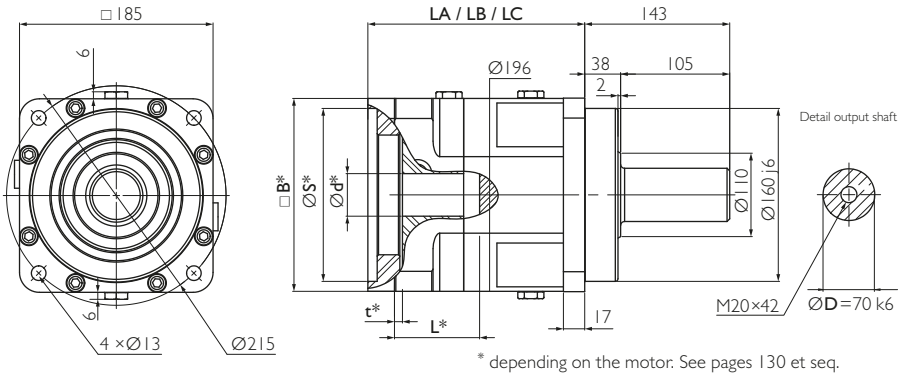

* depending on the motor. See pages 130 et seq.

Example PR 180 A4, 1-stage

Output

Standard

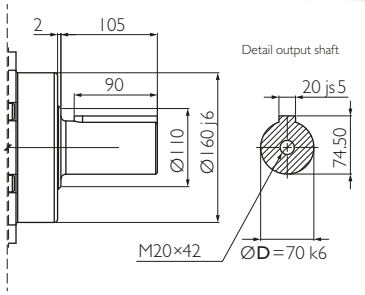

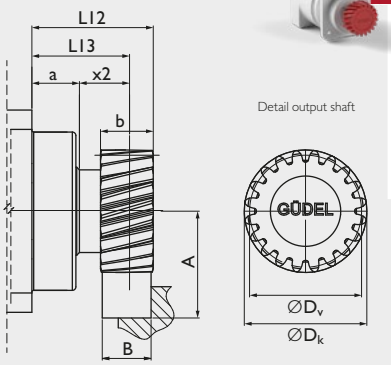

Optional

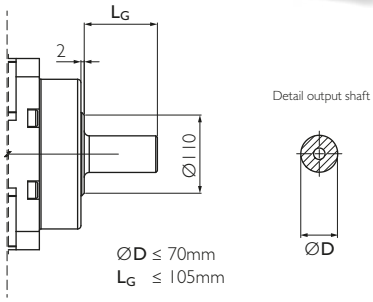

Option 3 on request. Adjustments can reduce capacity.

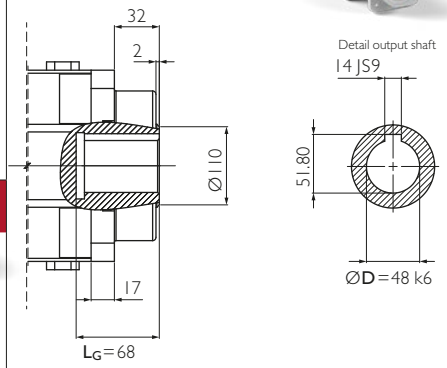

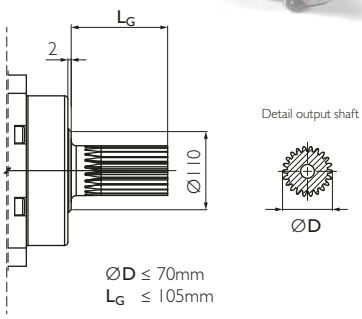

Option 5 on request. Adjustments can reduce capacity.

Material	16MnCr5 DIN 1.7131
Teeth	pressure angle α = 20°, helical teeth left, 19°31'42" hardened (58^{+4}_{0} HRC), ground, crowned
Quality	6f24 DIN 3962 / 63 / 67

Your ideal drive train

Function Package with gearbox, rack and pinion from Güdel

Pinion

Pinion for PR on request

Available ratios *		i		3-stage									
				36	45	60	75	90	105	120	150	210	300
Nominal torque S5 a)		T_{2N}	[Nm]	1 600	1 600	1 600	1 600	1 600	1 600	1 600	1 600	1 600	1 600
Acceleration torque S5 b)		T_{2B}	[Nm]	1 900	1 900	1 900	1 900	1 900	1 900	1 900	1 900	1 900	1 900
Nominal input speed S5 c)		n_{1N}	[rpm]	2 200	2 700	2 700	2 700	2 700	2 700	2 700	2 700	2 700	2 700
Maximum input speed S5		n_{1max}	[rpm]	3 200	3 200	3 200	3 200	3 200	3 200	3 200	3 200	3 200	3 200
Emergency stop torque d)		T_{2not}	[Nm]	3 000	3 000	3 000	3 000	3 000	3 000	3 000	3 000	3 000	3 000
Efficiency		η	[%]	88									
Lifetime		L_h	[h]	> 20 000									
Weight		M	[kg]	46									
Angular backlash		j_t	[arcmin]	Precision **P 1** ≤ 1 / **P 3** ≤ 3 / **P 5** ≤ 5 / **P 12** ≤12									
Torsionnal rigidity e)		C_{t2}	[Nm/arcmin]	300.0	270.3	270.3	270.3	246.8	270.3	300.0	270.3	253.1	220.5
Noise i)		L_{pA}	[dB(A)]	≤ 72									
Max. permitted housing temperature g)		T	[°C]	90									
Protection class				IP 65									
Direction of rotation				Same way input / output									
Max. radial force on output shaft f)		F_{rmax}	[N]	Center of output shaft: 18 000 / End of output shaft: 13 000									
Max. axial force on output shaft f)		F_{amax}	[N]	20 000									
Color				Red, RAL 3003									
Inertia in kg.cm² h)	Ø19	J_1	[kgcm²]	23.60	17.37	16.77	16.52	9.22	11.77	9.07	9.01	8.96	8.93
	Ø24			24.65	18.42	17.82	17.57	10.27	12.82	10.12	10.06	10.01	9.98
	Ø32			26.86	20.63	20.03	19.78	12.48	15.03	12.33	12.27	12.22	12.19
	Ø35			29.78	23.55	22.95	22.70	15.40	17.95	15.25	15.19	15.14	15.11
	Ø38			35.38	29.15	28.55	28.30	21.00	23.55	20.85	20.79	20.74	20.71
	Ø42			34.88	28.65	28.05	27.80	20.50	23.05	20.35	20.29	20.24	20.21
	Ø48			35.28	29.05	28.45	28.20	20.90	23.45	20.75	20.69	20.64	20.61

* Other ratios available. 27, 48, 63, 84, 147 on request.
a) Nominal output torque when operating at n_{1N}.
b) 1000 cycles per hour max.
c) Valid for an ambient temperature of 20°C and T_{2N}. At higher ambient temperatures, please reduce speed.
d) Valid 1000 times the gearbox life.
e) Valid for an input Ø of 48 mm in 1-stage and 38 mm in 2- and 3-stage.
f) Values for 300 rpm.
g) For other temperatures, please contact us. Nominal output torque when operating at n_{1N}.
h) Depending on the motor output shaft Ø.
i) With n_{1N}=2500 rpm no load.

Rack

Rack for PR on request

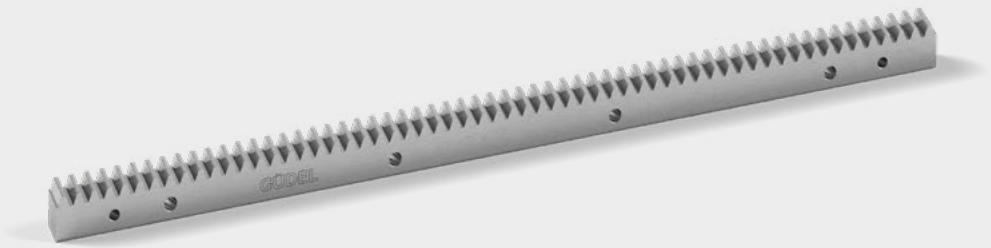

Input

A	for motor shaft	L ≤ 85	24 ≤ Ød ≤ 48	result in **LA**
B	for motor shaft	85 < L ≤ 115	48 < Ød ≤ 55	result in **LB**

Output

Standard

0

		1-stage	2-stage	3-stage
LA	[mm]	229	300	371
LB	[mm]	259	330	

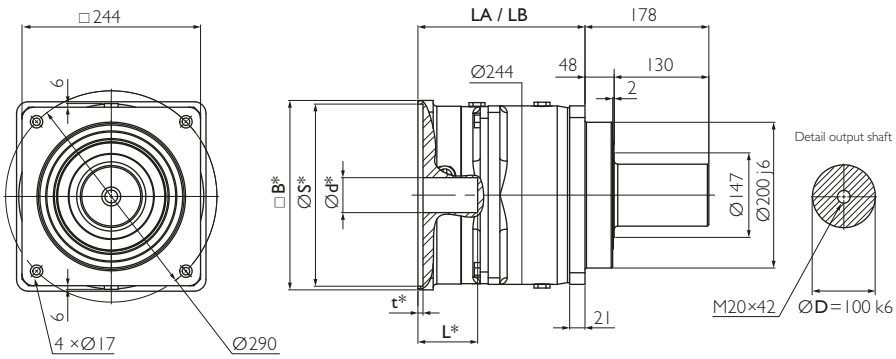

* depending on the motor. See pages 130 et seq.

Example PR 240 A5, 1-stage

1

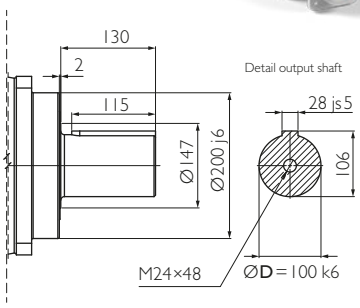

2

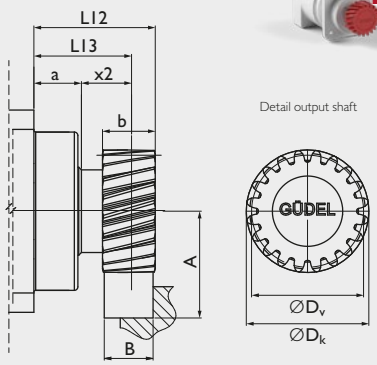

Optional

3

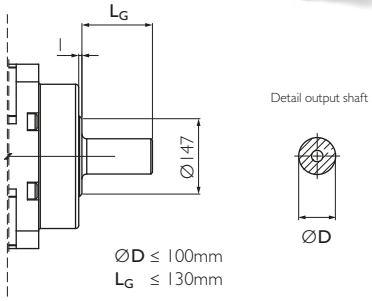

Option 3 on request. Adjustments can reduce capacity.

4

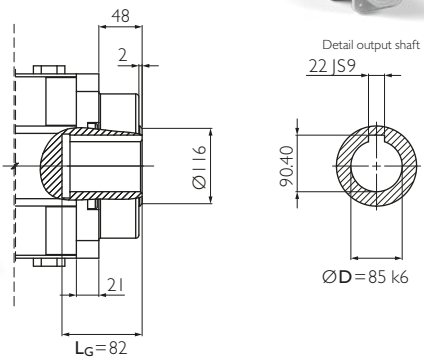

5

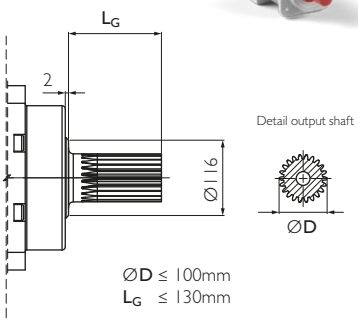

Option 5 on request. Adjustments can reduce capacity.

Material	16MnCr5 DIN 1.7131
Teeth	pressure angle α = 20°, helical teeth left, 19°31'42" hardened (58$^{+4}_{0}$ HRC), ground, crowned
Quality	6f24 DIN 3962 / 63 / 67

Your ideal drive train

Function Package with gearbox, rack and pinion from Güdel

Pinion

Pinion for PR on request

Available ratios		i		1-stage	2-stage				
				3	9	12	15	21	30
Nominal torque S5 a)		T_{2N}	[Nm]	4 400	4 400	4 400	4 400	4 400	4 400
Acceleration torque S5 b)		T_{2B}	[Nm]	5 600	5 600	5 600	5 600	5 600	5 600
Nominal input speed S5 c)		n_{1N}	[rpm]	800	800	1 400	1 500	1 500	1 500
Maximum input speed S5		n_{1max}	[rpm]	1 600	1 600	2 800	2 800	2 800	2 800
Emergency stop torque d)		T_{2not}	[Nm]	8 500	8 500	8 500	8 500	8 500	8 500
Efficiency		η	[%]	94	91				
Lifetime		L_h	[h]	> 20 000					
Weight		M	[kg]	70	90				
Angular backlash		j_t	[arcmin]	Precision **P 1** ≤ 1 / **P 3** ≤ 3 / **P 5** ≤ 5 / **P 12** ≤12					
Torsionnal rigidity e)		C_{t2}	[Nm/arcmin]	814.7	730.3	756.6	779.8	805.9	736.1
Noise i)		L_{pA}	[dB(A)]	≤ 74					
Max. permitted housing temperature g)		T	[°C]	90					
Protection class				IP 65					
Direction of rotation				Same way input / output					
Max. radial force on output shaft f)		F_{rmax}	[N]	Center of output shaft: 37 500 / End of output shaft: 25 000					
Max. axial force on output shaft f)		F_{amax}	[N]	34 000					
Color				Red, RAL 3003					
Inertia in kg.cm² h)	Ø24	J_1	[kgcm²]	161.0	146.0	79.1	55.0	35.4	23.6
	Ø32			163.2	148.2	81.3	57.2	37.6	25.8
	Ø35			168.5	153.5	86.6	62.5	42.9	31.1
	Ø38			171.9	156.9	90.0	65.9	46.3	34.5
	Ø42			171.4	156.4	89.5	65.4	45.8	34.0
	Ø48			171.6	156.6	89.7	65.6	46.0	34.2
	Ø55			194.2	179.2	112.3	88.2	68.6	56.8

a) Nominal output torque when operating at n_{1N}.
b) 1000 cycles per hour max.
c) Valid for an ambient temperature of 20°C and T_{2N}. At higher ambient temperatures, please reduce speed.
d) Valid 1000 times the gearbox life.
e) Valid for an input Ø of 55 mm in 1-stage and 48 mm in 2- and 3-stage.
f) Values for 300 rpm.
g) For other temperatures, please contact us. Nominal output torque when operating at n_{1N}.
h) Depending on the motor output shaft Ø.
i) With n_{1N}=1800 rpm no load.

Rack

Rack for PR on request

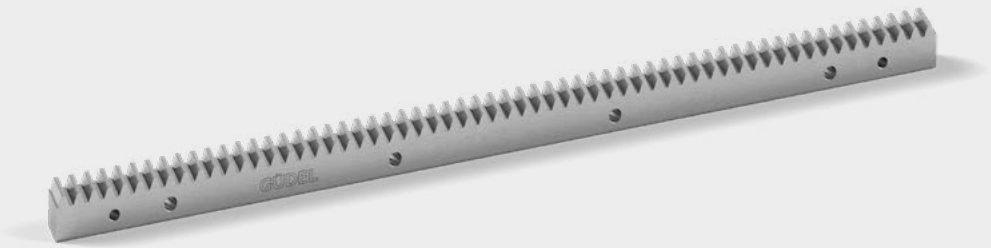

Input

A	for motor shaft	L ≤ 85	24 ≤ Ød ≤ 48	result in **LA**
B	for motor shaft	85 < L ≤ 115	48 < Ød ≤ 55	result in **LB**

Output

Standard

0

		1-stage	2-stage	3-stage
LA	[mm]	229	300	371
LB	[mm]	259	330	

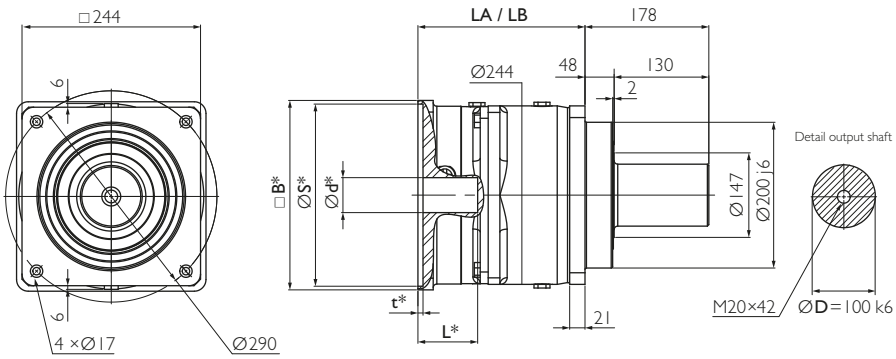

* depending on the motor. See pages 130 et seq.

1

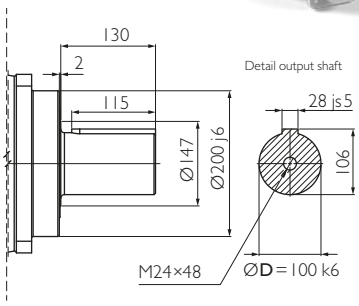

2

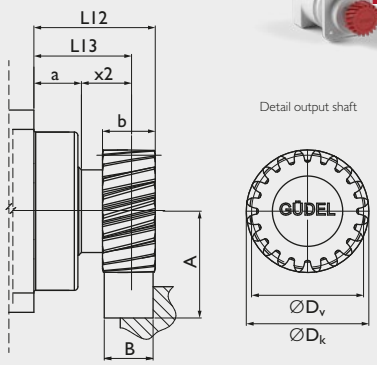

Optional

3

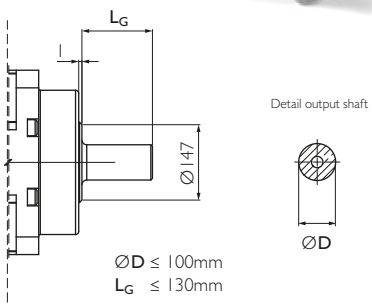

Option 3 on request. Adjustments can reduce capacity.

4

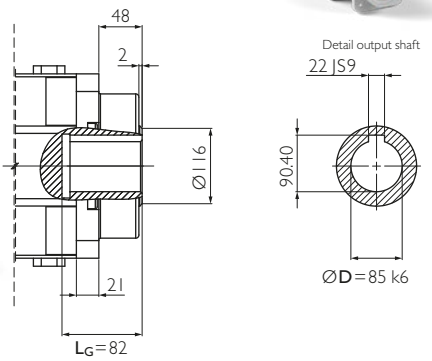

5

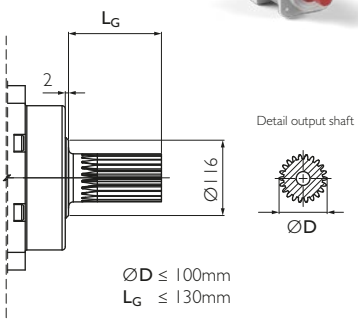

Option 5 on request. Adjustments can reduce capacity.

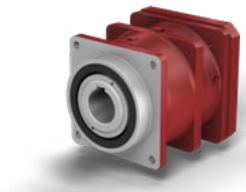

Example PR 240 B4, 1-stage

Material	16MnCr5 DIN 1.7131
Teeth	pressure angle α = 20°, helical teeth left, 19°31'42" hardened (58^{+4}_{0} HRC), ground, crowned
Quality	6f24 DIN 3962 / 63 / 67

Your ideal drive train

Function Package with gearbox, rack and pinion from Güdel

Pinion

Pinion for PR on request

Available ratios *		i		3-stage									
				36	45	60	75	90	105	120	150	210	300
Nominal torque S5 a)		T_{2N}	[Nm]	4 400	4 400	4 400	4 400	4 400	4 400	4 400	4 400	4 400	4 400
Acceleration torque S5 b)		T_{2B}	[Nm]	5 600	5 600	5 600	5 600	5 600	5 600	5 600	5 600	5 600	5 600
Nominal input speed S5 c)		n_{1N}	[rpm]	1 600	1 900	1 900	1 900	1 900	1 900	1 900	1 900	1 900	1 900
Maximum input speed S5		n_{1max}	[rpm]	2 800	2 800	2 800	2 800	2 800	2 800	2 800	2 800	2 800	2 800
Emergency stop torque d)		T_{2not}	[Nm]	8 500	8 500	8 500	8 500	8 500	8 500	8 500	8 500	8 500	8 500
Efficiency		η	[%]	88									
Lifetime		L_h	[h]	> 20 000									
Weight		M	[kg]	110									
Angular backlash		j_t	[arcmin]	Precision **P 1** ≤ 1 / **P 3** ≤ 3 / **P 5** ≤ 5 / **P 12** ≤12									
Torsionnal rigidity e)		C_{t2}	[Nm/arcmin]	680.9	701.3	660.6	701.3	660.6	701.3	680.9	692.6	718.8	660.6
Noise i)		L_{pA}	[dB(A)]	≤ 74									
Max. permitted housing temperature g)		T	[°C]	90									
Protection class				IP 65									
Direction of rotation				Same way input / output									
Max. radial force on output shaft f)		F_{rmax}	[N]	Center of output shaft: 37 500 / End of output shaft: 25 000									
Max. axial force on output shaft f)		F_{amax}	[N]	34 000									
Color				Red, RAL 3003									
Inertia in kg.cm² h)	Ø24	J_1	[kgcm²]	78.6	55.0	78.2	54.6	23.5	35.1	23.4	23.4	23.4	22.3
	Ø32			80.8	57.2	80.4	56.8	25.7	37.3	25.6	25.6	25.6	24.5
	Ø35			86.1	62.5	85.7	62.1	31.0	42.6	30.9	30.9	30.9	29.8
	Ø38			89.5	65.9	89.1	65.5	34.4	46.0	34.3	34.3	34.3	33.2
	Ø42			89.0	65.4	88.6	65.0	33.9	45.5	33.8	33.8	33.8	32.7
	Ø48			89.2	65.6	88.8	65.2	34.1	45.7	34.0	34.0	34.0	32.9
	Ø55			111.8	88.2	111.4	87.8	56.7	68.3	56.6	56.6	56.6	55.5

* Other ratios available. 27, 48, 63, 84, 147 on request.
a) Nominal output torque when operating at n_{1N}.
b) 1000 cycles per hour max.
c) Valid for an ambient temperature of 20°C and T_{2N}. At higher ambient temperatures, please reduce speed.
d) Valid 1000 times the gearbox life.
e) Valid for an input Ø of 55 mm in 1-stage and 48 mm in 2- and 3-stage.
f) Values for 300 rpm.
g) For other temperatures, please contact us. Nominal output torque when operating at n_{1N}.
h) Depending on the motor output shaft Ø.
i) With n_{1N}=1800 rpm no load.

Rack

Rack for PR on request

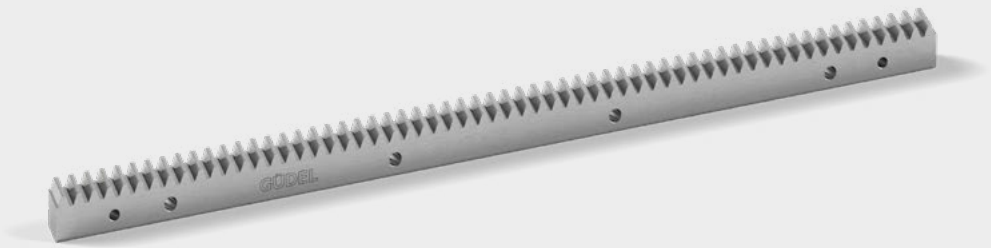

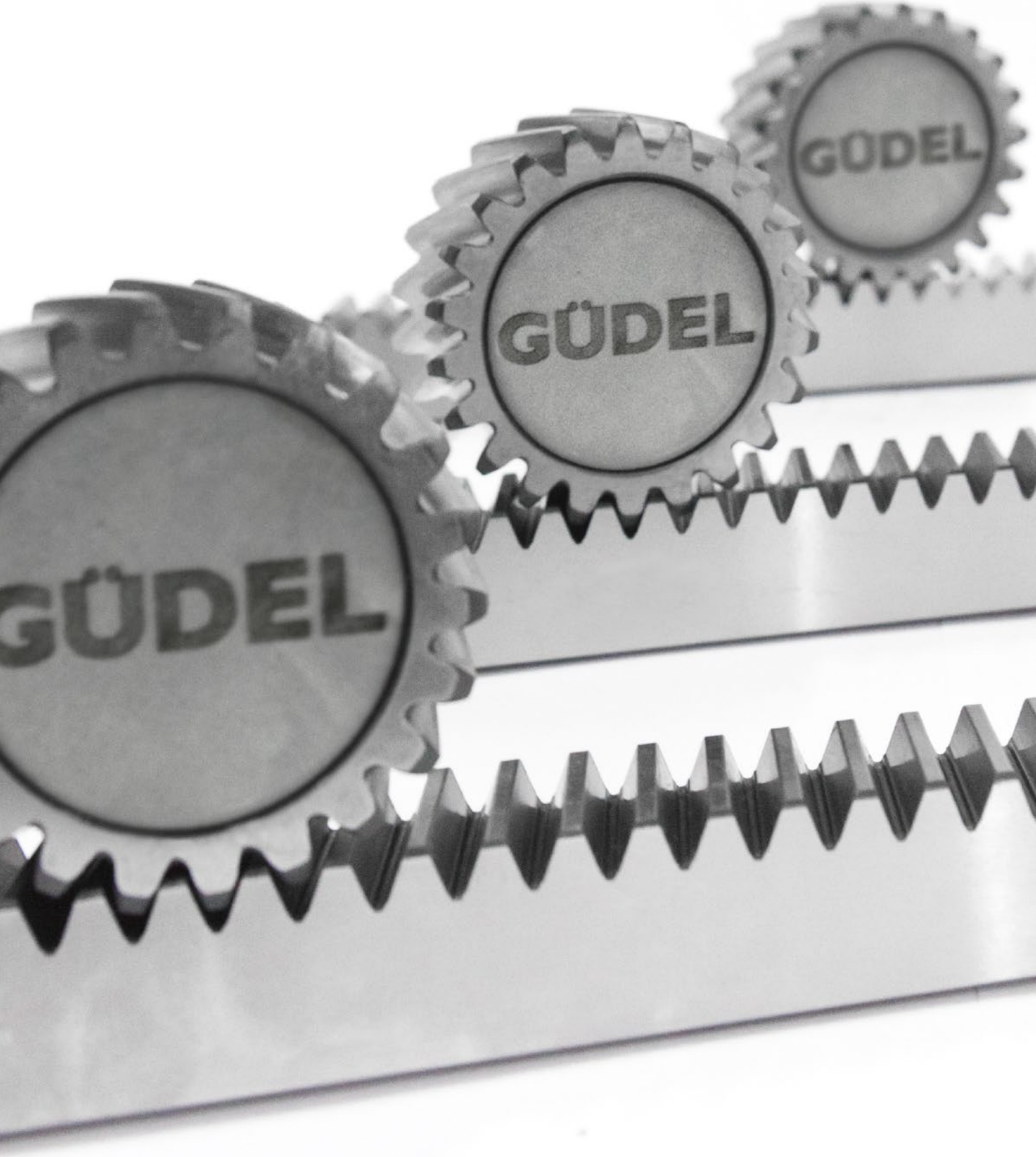
GÜDEL
GÜDEL
GÜDEL

Your ideal drive train

GÜDEL

Rack & pinion programm

Our function package for your ideal drive train with gearbox, rack and pinion from Güdel.

Pinion

Helical tooth, modular pitch

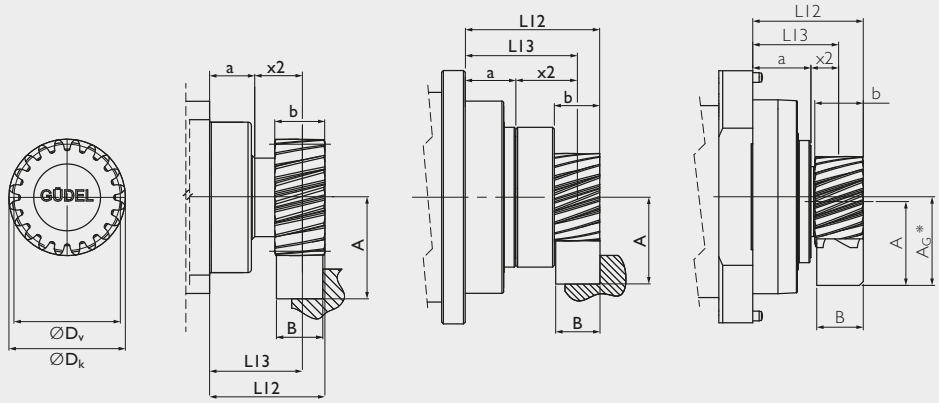

NRH, NR, SR

NRHP

NGHP

Hardened and ground

Material
16MnCr5 DIN 1.7131

Teeth
pressure angle α = 20°
helical teeth left, 19°31'42"
hardened (58^{+4}_{0}HRC)
ground, crowned

Quality
6f24 DIN 3962/63/67

*** Tolerances A_G**
Size 080 A_G ±0.05
Size 100 A_G ±0.06
Size 140 A_G ±0.08

Geometrical data

	Size	m_n	P_t	z	A	A_G	b	D_k	D_0	D_v	L12	L13	x2	a	M
NRH/ SR	080	2	6.66	20	43.221	–	25	46.44	42.441	42.441	52.5	40.0	20.0	20	0.3
		2.5	8.33	16	43.471	–	25	48.94	42.441	43.941	52.5	40.0	20.0	20	0.3
	100	2	6.66	25	48.526	–	25	57.05	53.052	53.052	63.3	51.0	24.0	27	0.4
		3	10.00	20	57.831	–	30	69.66	63.662	63.662	69.0	54.0	27.0	27	0.7
	140	3	10.00	22	61.014	–	30	76.03	70.028	70.028	69.5	54.5	27.5	27	0.8
		4	13.33	20	77.441	–	40	92.88	84.883	84.883	79.0	59.0	32.0	27	1.6
NRHP	080	2	6.66	16	39.577	–	26	39.15	33.953	35.153	75.0	62.0	32.0	30	0.6
	100	2	6.66	16	39.577	–	26	39.15	33.953	35.153	77.0	64.0	35.0	29	1.0
		2	6.66	21	44.282	–	26	48.56	44.563	44.563	77.0	64.0	35.0	29	1.0
		2.5	8.33	16	43.471	–	26	48.94	42.441	43.941	77.0	64.0	35.0	29	1.0
		3	10.00	14	49.182	–	32	52.36	44.563	46.363	83.0	67.0	38.0	29	1.2
	140	2.5	8.33	21	49.352	–	26	60.70	55.704	55.704	89.0	76.0	38.0	38	1.9
		3	10.00	18	54.648	–	32	63.30	57.296	57.296	95.0	79.0	41.0	38	2.0
NGHP	080	2	6.66	20	43.221	45.721	25	46.44	42.441	42.441	57.0	44.5	14.5	30	0.3
		2.5	8.33	16	43.471	45.971	25	48.94	42.441	43.941	57.0	44.5	14.5	30	0.3
	100	2	6.66	25	48.526	51.526	25	57.05	53.052	53.052	57.0	44.5	15.5	29	0.4
		3	10.00	20	57.831	60.831	30	69.66	63.662	63.662	62.0	47.0	18.0	29	0.7
	140	3	10.00	22	61.014	65.014	30	76.03	70.028	70.028	72.0	57.0	19.0	38	0.8
		4	13.33	20	77.441	81.441	40	92.88	84.883	84.883	82.0	62.0	24.0	38	1.6
NR	180	4	13.33	20	77.441	–	40	92.88	84.883	84.883	83.5	63.5	31.5	32	1.5
		5	16.66	20	87.052	–	50	116.10	106.103	106.103	89.5	64.5	32.5	32	3.0
	240	5	16.66	24	97.662	–	50	137.32	127.324	127.324	112.5	87.5	47.5	40	5.4
		6	20.00	20	106.662	–	60	139.32	127.324	127.324	111.0	81.0	41.0	40	5.6
SR	180	4	13.33	20	77.441	–	40	92.88	84.883	84.883	89.5	69.5	31.5	38	1.5
		5	16.66	20	87.052	–	50	116.10	106.103	106.103	95.5	70.5	32.5	38	3.0
	240	5	16.66	24	97.662	–	50	137.32	127.324	127.324	120.5	95.5	47.5	48	5.4
		6	20.00	20	106.662	–	60	139.32	127.324	127.324	119.0	89.0	41.0	48	5.6

m_n: Normal module, P_t: Transverse pitch [mm], z: Number of teeth, A_G: Gearbox position, D_0: Pitch circle diameter for calculation, D_v: Pitch circle diameter for design, M: Weight [kg]

Rack

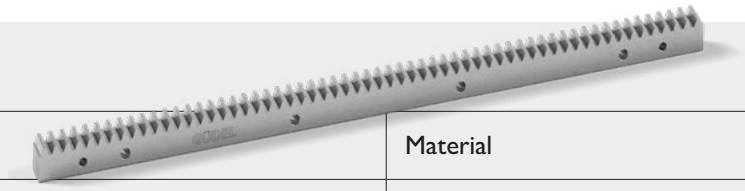

F_p

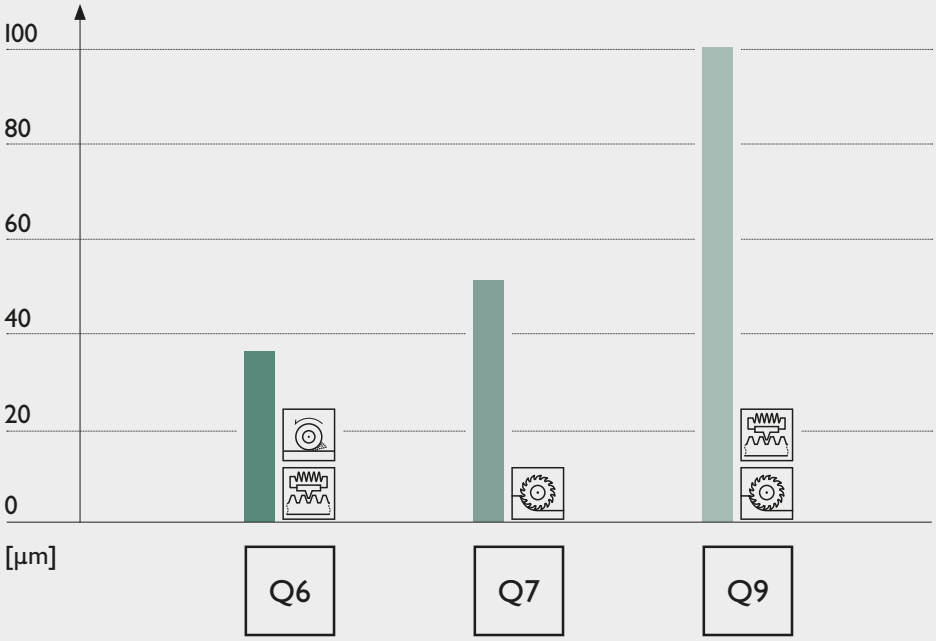

Example of the cumulative pitch deviation F_p for module 4 based on length 1000mm. Quality DIN 3962.

Material

Steel

Processes

Hardened

Milled

Ground

Helical

Geometrical data

Size	m_n	P_t	L	z	b	h
080 100	2	6.66	500.00	75	24	24
			1000.00	150		
			2000.00	300		
080 100 140	2.5	8.33	500.00	60	24	24
			1000.00	120		
			2000.00	240		
100 140	3	10.00	500.00	50	29	29
			1000.00	100		
			2000.00	200		
140 180	4	13.33	506.67	38	39	39
			1000.00	75		
			2000.00	150		
180 240	5	16.66	500.00	30	49	39
			1000.00	60		
			2000.00	120		
240	6	20.00	500.00	25	59	49
			1000.00	50		
			2000.00	100		

m_n: Normal module, P_t: Transverse pitch [mm] , z: Number of teeth
* Double amount of fixing holes for maximum feed force

Q6	Q6+*	Q7	Q9
Part No.	Part No.	Part No.	Part No.
246022	246122	155022	158022
246023	246123	155023	158023
246024	246124	155024	158024
246032	246132	155032	158032
246033	246133	155033	158033
246034	246134	155034	158034
246042	246142	155042	158042
246043	246143	155043	158043
246044	246144	155044	158044
246055	246152	155052	158052
246056	246153	155053	158053
246057	246154	155054	158054
246062	246162	155062	158062
246063	246163	155063	158063
246064	246164	155064	158064
246072	246172	-	158072
246073	246173	-	158073
246074	246174	-	158074

Page 122 Page 123 Page 124 Page 125

Helical teeth, modular pitch

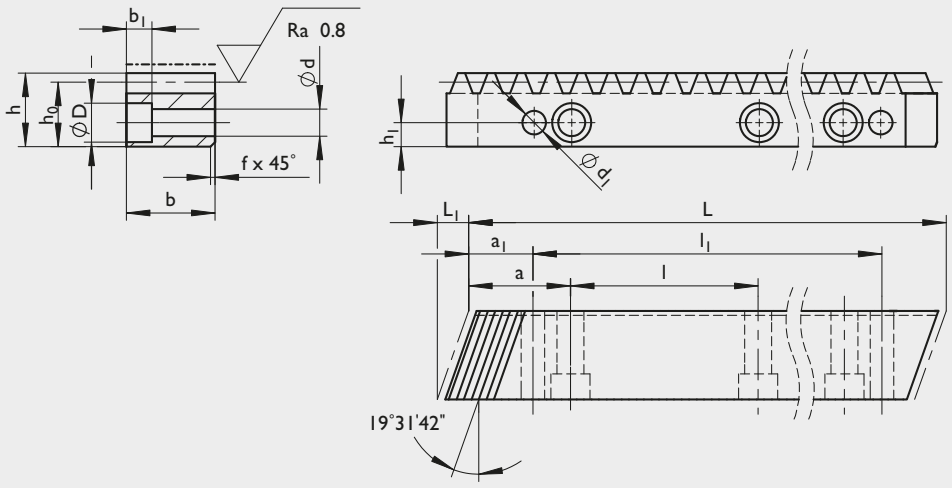

–·–· hardened

Hardened and ground

Material
C45E DIN 1.1191

Profile
all faces ground

Teeth
pressure angle α = 20°
helical teeth system right
helix angle ß = 19° 31'42''
hardened (54^{+4}_{0} HRC)
and ground

Quality
6h23 DIN 3962/63/67

p_f [mm]
cut-to-length tolerance for
continuous mounting -0.05/-0.50

F_{pL} [mm]
cumulative pitch deviation
based on length L

Geometrical data

Size	m_n	p_t	L	L_1	z	b	h	h_0	f+0,5	a	l	h_1	d	D	b_1	a_1	l_1	d_1	F_{pL}	M	Part No.
080 100	2	6.66	500.00	8.5	75	24	24	22.0	2	62.5	125	8	7	11	7	31.7	436.6	5.7	0.025	2.0	246022
			1000.00		150												936.6		0.036	4.0	246023
			2000.00		300												1936.6		0.058	8.0	246024
080 100 140	2.5	8.33	500.00	8.5	60	24	24	21.5	2	62.5	125	9	7	11	7	31.7	436.6	5.7	0.027	1.9	246032
			1000.00		120												936.6		0.036	3.9	246033
			2000.00		240												1936.6		0.053	7.7	246034
100 140	3	10.00	500.00	10.3	50	29	29	26.0	2	62.5	125	9	10	15	9	35.0	430.0	7.7	0.028	2.8	246042
			1000.00		100												930.0		0.037	5.6	246043
			2000.00		200												1930.0		0.054	11.2	246044
140 180	4	13.33	506.67	13.8	38	39	39	35.0	2	62.5	125	12	12	18	11	33.3	433.0	9.7	0.030	5.1	246055
			1000.00		75												933.4		0.036	10.1	246056
			2000.00		150												1933.4		0.050	20.2	246057
180 240	5	16.66	500.00	17.4	30	49	39	34.0	3	62.5	125	12	14	20	13	37.5	425.0	11.7	0.028	6.0	246062
			1000.00		60												925.0		0.034	12.0	246063
			2000.00		120												1925.0		0.045	24.1	246064
240	6	20.00	500.00	20.9	25	59	49	43.0	3	62.5	125	16	18	26	17	37.5	425.0	15.7	0.031	8.9	246072
			1000.00		50												925.0		0.036	18.0	246073
			2000.00		100												1925.0		0.046	36.2	246074

m_n: Normal module, P_t: Transverse pitch [mm], z: Number of teeth, d_1: Predrilled, M: Weight [kg]

Helical teeth, modular pitch

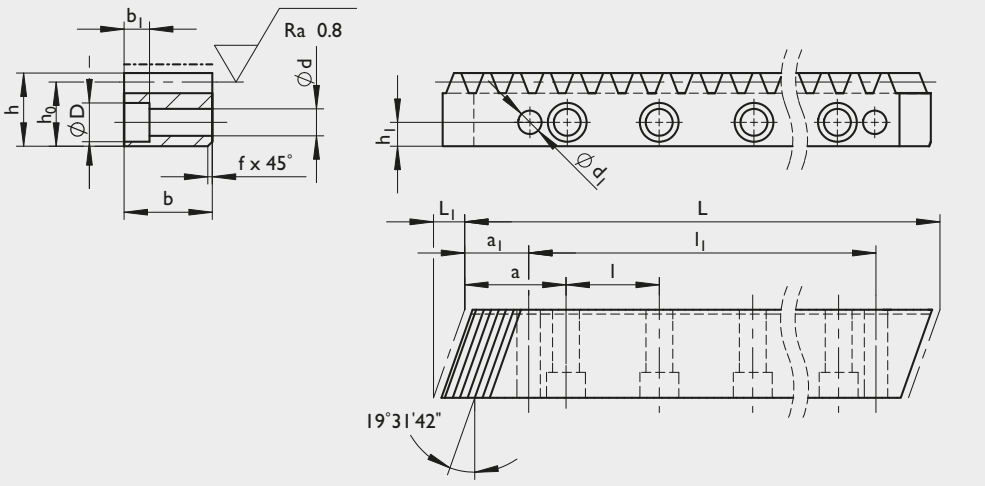

–·–· hardened

Hardened and ground

Material
C45E DIN 1.1191

Profile
all faces ground

Teeth
pressure angle α = 20°
helical teeth system right
helix angle ß = 19° 31'42''
hardened (54^{+4}_{0} HRC)
and ground

Quality
6h23 DIN 3962/63/67

p_f [mm]
cut-to-length tolerance for
continuous mounting -0.05/-0.50

F_{pL} [mm]
cumulative pitch deviation
based on length L

Geometrical data

Size	m_n	p_t	L	L_1	z	b	h	h_0	f+0,5	a	l	h_1	d	D	b_1	a_1	l_1	d_1	F_{pL}	M	Part No.
080 100	2	6.66	500.00	8.5	75	24	24	22.0	2	62.5	62.5	8	7	11	7	31.7	436.6	5.7	0.025	2.0	246122
			1000.00		150												936.6		0.036	3.9	246123
			2000.00		300												1936.6		0.058	7.8	246124
080 100 140	2.5	8.33	500.00	8.5	60	24	24	21.5	2	62.5	62.5	9	7	11	7	31.7	436.6	5.7	0.027	1.9	246132
			1000.00		120												936.6		0.036	3.8	246133
			2000.00		240												1936.6		0.053	7.6	246134
100 140	3	10.00	500.00	10.3	50	29	29	26.0	2	62.5	62.5	9	10	15	9	35.0	430.0	7.7	0.028	2.7	246142
			1000.00		100												930.0		0.037	5.4	246143
			2000.00		200												1930.0		0.054	10.8	246144
140 180	4	13.33	506.67	13.8	38	39	39	35.0	2	62.5	62.5	12	12	18	11	33.3	433.0	9.7	0.030	4.9	246152
			1000.00		75												933.4		0.036	9.7	246153
			2000.00		150												1933.4		0.050	19.5	246154
180 240	5	16.66	500.00	17.4	30	49	39	34.0	3	62.5	62.5	12	14	20	13	37.5	425.0	11.7	0.028	5.8	246162
			1000.00		60												925.0		0.034	11.5	246163
			2000.00		120												1925.0		0.045	23.0	246164
240	6	20.00	500.00	20.9	25	59	49	43.0	3	62.5	62.5	16	18	26	17	37.5	425.0	15.7	0.031	8.5	246172
			1000.00		50												925.0		0.036	16.9	246173
			2000.00		100												1925.0		0.046	33.9	246174

m_n: Normal module, P_t: Transverse pitch [mm], z: Number of teeth, d_1: Predrilled, M: Weight [kg]

Helical teeth, modular pitch

Millled

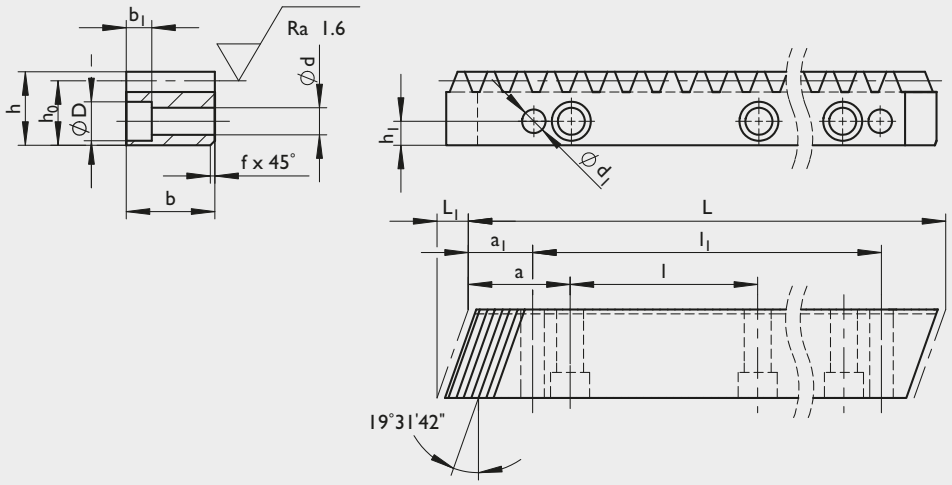

Material
42CrMo4 DIN 1.72251

Profile
all faces milled

Teeth
pressure angle α = 20°
helical teeth system right
helix angle ß = 19° 31'42''
milled

Quality
7h25 DIN 3962/63/67

p_f [mm]
cut-to-length tolerance for
continuous mounting -0.05/-0.50

F_{pL} [mm]
cumulative pitch deviation
based on length L

Geometrical data

Size	m_n	p_t	L	L_1	z	b	h	h_0	f+0,5	a	l	h_1	d	D	b_1	a_1	l_1	d_1	F_{pL}	M	Part No.
080 100	2	6.66	500.00	8.5	75	24	24	22.0	1	62.5	125	8	7	11	7	31.7	436.6	5.7	0.036	2.0	155022
			1000.00		150												936.6		0.050	4.0	155023
			2000.00		300												1936.6		0.077	8.0	155024
080 100 140	2.5	8.33	500.00	8.5	60	24	24	21.5	1	62.5	125	9	7	11	7	31.7	436.6	5.7	0.038	1.9	155032
			1000.00		120												936.6		0.050	3.9	155033
			2000.00		240												1936.6		0.075	7.7	155034
100 140	3	10.00	500.00	10.3	50	29	29	26.0	1	62.5	125	9	10	15	9	35.0	430.0	7.7	0.040	2.8	155042
			1000.00		100												930.0		0.051	5.6	155043
			2000.00		200												1930.0		0.073	11.2	155044
140 180	4	13.33	506.67	13.8	38	39	39	35.0	1	62.5	125	12	12	18	11	33.3	433.0	9.7	0.042	5.1	155052
			1000.00		75												933.4		0.051	10.1	155053
			2000.00		150												1933.4		0.070	20.2	155054
180 240	5	16.66	500.00	17.4	30	49	39	34.0	1	62.5	125	12	14	20	13	37.5	425.0	11.7	0.040	6.0	155062
			1000.00		60												925.0		0.048	12.0	155063
			2000.00		120												1925.0		0.062	24.1	155064

m_n: Normal module, P_t: Transverse pitch [mm], z: Number of teeth, d_1: Predrilled, M: Weight [kg]

Helical teeth, modular pitch

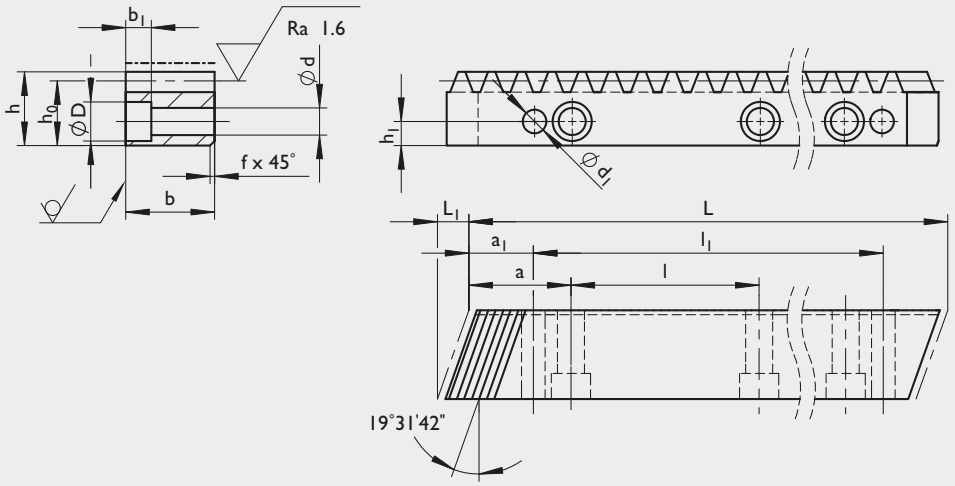

–·–· hardened

Milled and hardened

Material
C45E DIN 1.1191

Profile
all faces milled

Teeth
pressure angle α = 20°
helical teeth system right
helix angle ß = 19° 31'42''
hardened (54^{+4}_{0} HRC)
milled

Quality
9h27 DIN 3962/63/67

p_f [mm]
cut-to-length tolerance for continuous mounting -0.05/-0.50

F_{pL} [mm]
cumulative pitch deviation based on length L

Geometrical data

Size	m_n	p_t	L	L_1	z	b	h	h_0	f+0,5	a	l	h_1	d	D	b_1	a_1	l_1	d_1	F_{pL}	M	Part No.
080 100	2	6.66	500.00	8.5	75	24	24	22.0	2	62.5	125	8	7	11	7	31.7	436.6	5.7	0.073	2.0	158022
			1000.00		150												936.6		0.100	4.0	158023
			2000.00		300												1936.6		0.155	8.0	158024
080 100 140	2.5	8.33	500.00	8.5	60	24	24	21.5	2	62.5	125	9	7	11	7	31.7	436.6	5.7	0.076	1.9	158032
			1000.00		120												936.6		0.101	3.9	158033
			2000.00		240												1936.6		0.150	7.7	158034
100 140	3	10.00	500.00	10.3	50	29	29	26.0	2	62.5	125	9	10	15	9	35.0	430.0	7.7	0.080	2.8	158042
			1000.00		100												930.0		0.103	5.6	158043
			2000.00		200												1930.0		0.147	11.2	158044
140 180	4	13.33	506.67	13.8	38	39	39	35.0	2	62.5	125	12	12	18	11	33.3	433.0	9.7	0.083	5.1	158052
			1000.00		75												933.4		0.101	10.1	158053
			2000.00		150												1933.4		0.136	20.2	158054
180 240	5	16.66	500.00	17.4	30	49	39	34.0	3	62.5	125	12	14	20	13	37.5	425.0	11.7	0.080	6.0	158062
			1000.00		60												925.0		0.094	12.0	158063
			2000.00		120												1925.0		0.122	24.1	158064
240	6	20.00	500.00	20.9	25	59	49	43.0	3	62.5	125	16	18	26	17	37.5	425.0	15.7	0.087	8.9	158072
			1000.00		50												925.0		0.101	18.0	158073
			2000.00		100												1925.0		0.128	36.2	158074

m_n: Normal module, P_t: Transverse pitch [mm], z: Number of teeth, d_1: Predrilled, M: Weight [kg]

Technical information

GÜDEL

Generate the code of your planetary gearbox

Type	Size		Ratio		Configuration			
NRH	100	-	4	-	A	0	-	

Type
- NRH
- NRHP
- NGHP
- NR
- SR
- PR

Add **x** for special gearbox. Not defined in the standard reference. A unique study number will be assigned.

Size
- 080
- 100
- 140
- 180
- 240

Configuration
- A Small
- B Medium
- C Long

Configuration
- 0 Smooth
- 1 Keyway
- 3 Custom
- 4 Hollow
- 5 Spline

Configuration
- 2 Pinion

Output shafts (excl. output pinion)

D32	-	L58

D Diameter [mm]

L Shaft length [mm]

Output Pinion

z20	-	m3H

z Number of teeth

m Module

H Helical teeth

S Straight teeth

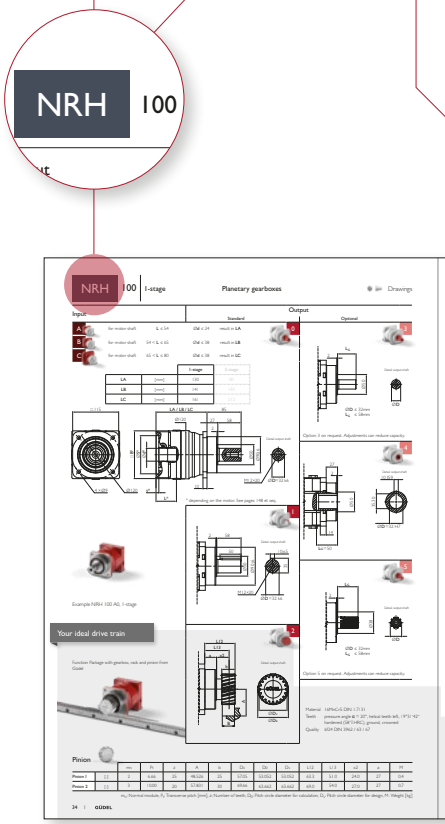

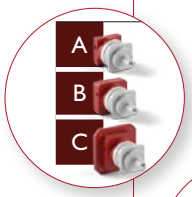

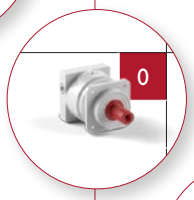

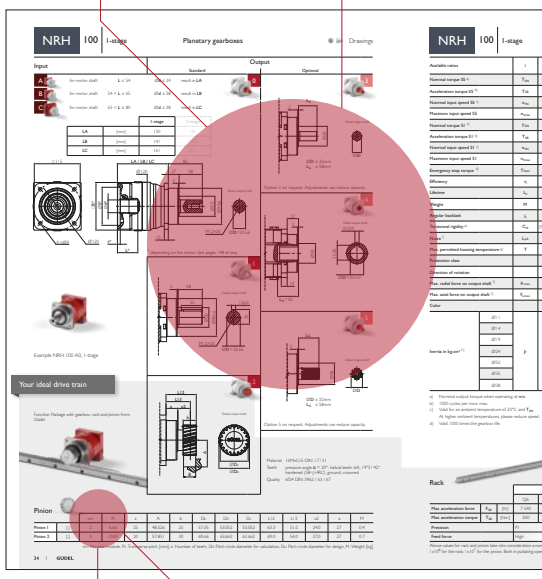

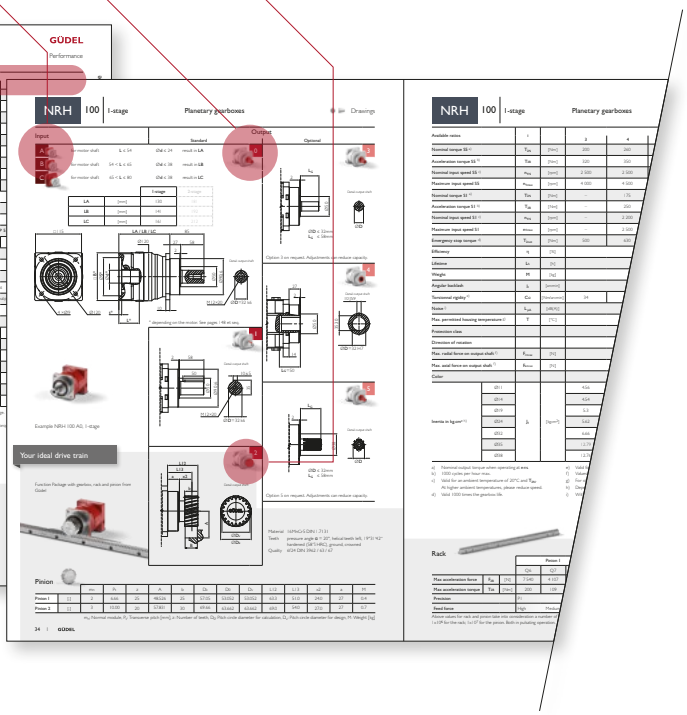

See **technical datasheets** on pages 30 et seq.

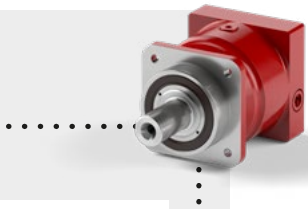

Example

NRH100-4-A0-D32-L58-TP-P3-AM

Position	Precision	Input	Motor
TP	P3	AM	

H1 Horizontal
V1 Upright
V2 Downside
TP All positions*

*Add **B** for option breather. reduces the pressure in S1.

P Precision [arcmin]

AM Motor adaptation
AC Keyway shaft
AL Smooth shaft

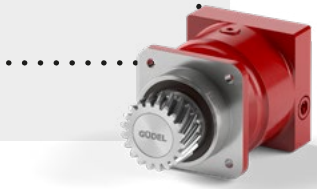

Example

NRH100-4-A2-z20-m3H-TP-P3-AM

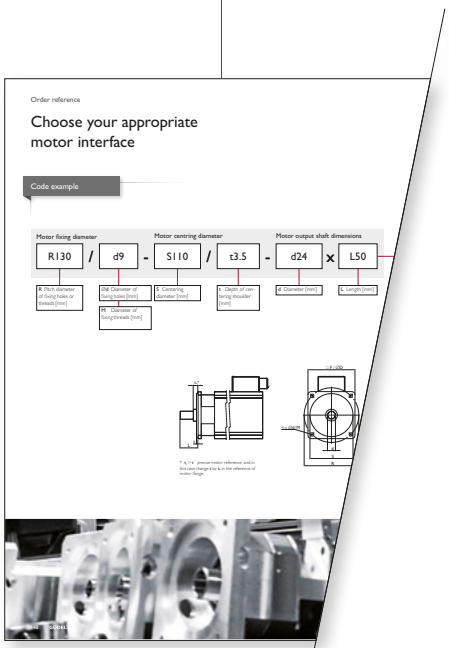

Order reference

Choose your appropriate motor interface

Code example

Motor fixing diameter | Motor centring diameter | Motor output shaft dimensions

R130 / d9 - S110 / t3.5 - d24 x L50

See motor interfaces on pages 130 et seq.

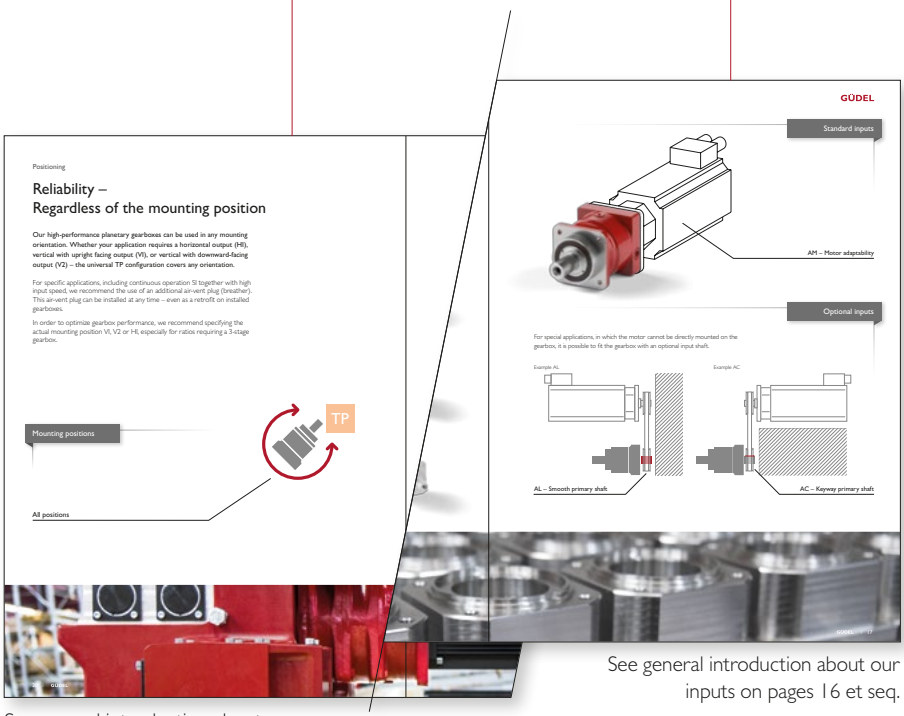

Positioning

Reliability –
Regardless of the mounting position

Our high-performance planetary gearboxes can be used in any mounting orientation. Whether your application requires a horizontal output (H0), vertical with upright facing output (V1), or vertical with downward-facing output (V2) – the universal TP configuration covers any orientation.

For specific applications, including continuous operation S1 together with high input speed, we recommend the use of an additional air-vent plug (breather). This air-vent plug can be installed at any time – even as a retrofit on installed gearboxes.

In order to optimize gearbox performance, we recommend specifying the actual mounting position V1, V2 or H1, especially for ratios requiring a 3-stage gearbox.

Mounting positions

TP

All positions

GÜDEL

Standard inputs

AM – Motor adaptability

Optional inputs

For special applications, in which the motor cannot be directly mounted on the gearbox, it is possible to fit the gearbox with an optional input shaft.

Example AL

Example AC

AL – Smooth primary shaft

AC – Keyway primary shaft

See general introduction about our inputs on pages 16 et seq.

See general introduction about our positioning on pages 20 et seq.

Choose your appropriate motor interface

Code example

Motor fixing diameter			Motor centring diameter		Motor output shaft dimensions		
R130	/	d9	- S110	/ t3.5	- d24	x	L50
R Pitch diameter of fixing holes or threads [mm]		**Ød** Diameter of fixing holes [mm] **M** Diameter of fixing threads [mm]	**S** Centering diameter [mm]	**t** Depth of centering shoulder [mm]	**d** Diameter [mm]		**L** Length [mm]

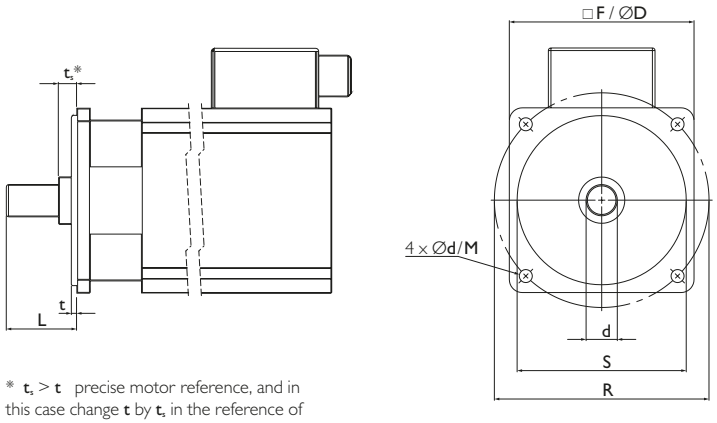

* $t_1 > t$ precise motor reference, and in this case change **t** by t_1 in the reference of motor flange.

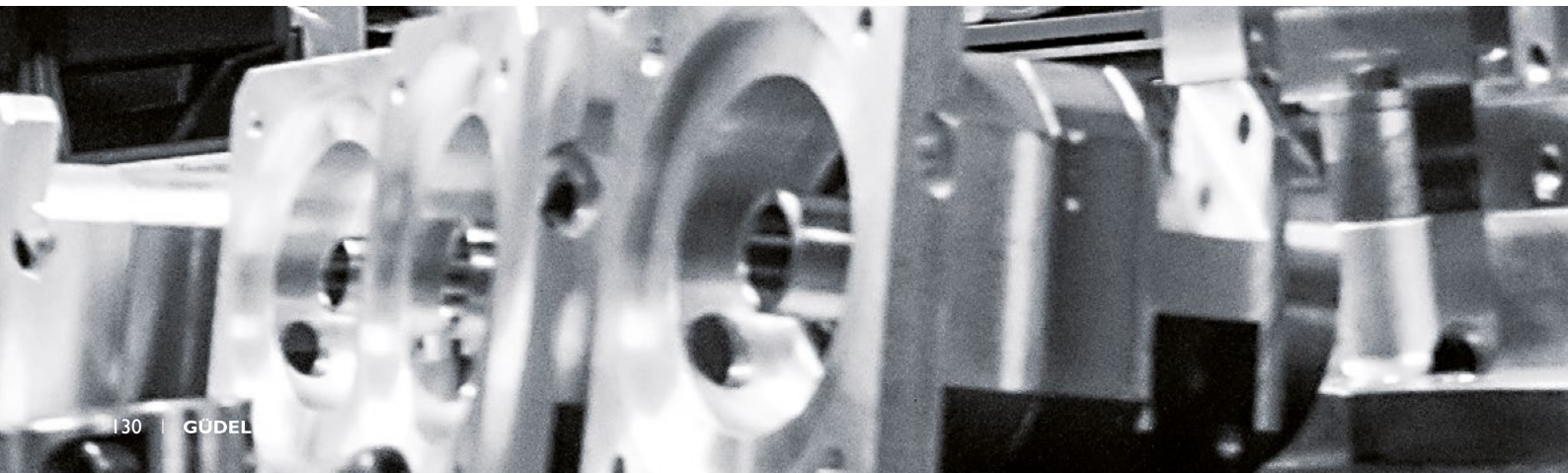

Motor					NRH / NRHP / NGHP				NR / SR / PR					Code
R	Ød/M	S	t	dxL	080	100	140 1T	140 2T	080	100	140	180	240	
63	d 4.5	40	2.5	9×20	A	A		A	A	A				R63 / d4.5-S40 / t2.5-d9×20
63	d 5.5	40	2.5	9×25	A	A		A	A	A				R63 / d5.5-S40 / t2.5-d9×25
64	d 5.4	40	2	9×20	A	A		A	A	A				R64 / d5.4-S40 / t2-d9×20
70	d 4.5	40	2.5	9×20	A	A		A	A	A				R70 / d4.5-S40 / t2.5-d9×20
70	d 4.5	50	3	11×30	A	A	A	A	A	A	A			R70 / d4.5-S50 / t3-d11×30
70	d 5.5	50	3	14×30	A	A	A	A	A	A				R70 / d5.5-S50 / t3-d14×30
75	d 5.5	60	2.5	11×23	A	A	A	A	A	A	A			R75 / d5.5-S60 / t2.5-d11×23
75	d 5.5	60	2.5	14×30	A	A	A	A	A	A	A			R75 / d5.5-S60 / t2.5-d14×30
75	d 5.5	60	3	14×30	A	A	A	A	A	A	A			R75 / d5.5-S60 / t3-d14×30
75	d 5.8	60	2.5	11×23	A	A	A	A	A	A				R75 / d5.8-S60 / t2.5-d11×23
75	d 6.5	60	3	14×30	A	A	A	A	A	A	A	A		R75 / d6.5-S60 / t3-d14×30
90	d 6	70	3	19×35	A	A	A	A	A	A	A	A		R90 / d6-S70 / t3-d19×35
90	d 7	70	3	14×30	A	A	A	A	A	A	A	A		R90 / d7-S70 / t3-d14×30
90	d 7	70	3	16×40	A	A	A	A	A	A	A	A		R90 / d7-S70 / t3-d16×40
72 / 75	6.5	60	3	14×30	A	A	A	A	A	A				R72-75(Slot) / d6.5-S60 / t3-d14×30
95	d 6.6	50	2.5	14×30	A	A	A	A	A	A	A			R95 / d6.6-S50 / t2.5-d14×30
100	d 7	80	3	14×30	A	A	A	A	A	A	A	A		R100 / d7-S80 / t3-d14×30
100	d 7	80	3	19×40	A	A	A	A	A	A	A	A		R100 / d7-S80 / t3-d19×40
100	d 6.5	80	2.5	14×30	A	A	A	A	A	A	A			R100 / d6.5-S80 / t2.5-d14×30
100	d 6.5	80	3	19×40	A	A	A	A	A	A	A	A		R100 / d6.5-S80 / t3-d19×40
100	d 6.6	80	4	10×32	A	A	A	A	A	A				R100 / d6.6-S80 / t4-d10×32
100	d 6.6	80	5	14×37	A	A	A	A	A	A	A			R100 / d6.6-S80 / t5-d14×37
100	d 6.6	80	5	16×40	A	A	A	A	A	A	A	A		R100 / d6.6-S80 / t5-d16×40
115	d 9	95	3	19×40	A	A	A	A	A	A	A	A		R115 / d9-S95 / t3-d19×40
115	d 7	95	3	24×45	A	A	A	A	A	A	A	A	A	R115 / d7-S95 / t3-d24×45
115	d 11	95	3	19×40	A	A	A	A	A	A	A	A		R115 / d11-S95 / t3-d19×40
130	d 9	95	3	19×40	B	A	A	A	A	A	A	A		R130 / d9-S95 / t3-d19×40
130	d 9	95	3	24×50	B	A	A	A	B	A	A	A	A	R130 / d9-S95 / t3-d24×50
130	d 9	110	3	24×50	B	A	A	A	B	A	A	A	A	R130 / d9-S110 / t3-d24×50
130	d 9	110	3.5	24×50	B	A	A	A	B	A	A	A	A	R130 / d9-S110 / t3.5-d24×50
130	d 11	110	3.5	19×40	B	A	A	A	A	A	A	A		R130 / d11-S110 / t3.5-d19×40
130	M8	110	3.5	24×50	B	A	A	A	B	A	A	A	A	R130 / M8-S110 / t3.5-d24×50
130	M8	110	3.5	28×60		B	A	B		B	B	A	A	R130 / M8-S110 / t3.5-d28×60
130	M8	110	3.5	38×80		C	B	C			C	B	A	R130 / M8-S110 / t3.5-d38×80
145	d 9	110	6	19×55	B	B	A	B	B	B	B	A		R145 / d9-S110 / t6-d19×55
145	d 9	110	6	28×63		B	B	B		B	B	B	A	R145 / d9-S110 / t6-d28×63
145	d 10	110	3.5	16×40	B	A	A	A	A	A	A	A		R145 / d10-S110 / t3.5-d16×40
165	d 11	130	3	28×60		B	A	B		B	B	A	A	R165 / d11-S130 / t3-d28×60
200	13.5	114.3	3.2	35×79		C	B	C			C	B	A	R200 / d13.5-S114.3 / t3.2-d35×79
200	13.5	114.3	3.2	42×113			B					C*	B	R200 / d13.5-S114.3 / t3.2-d42×113
165	d 11	130	3.5	19×28	B	A	A	A	B	A	A	A		R165 / d11-S130 / t3.5-d19×28
165	d 11	130	3.5	24×50	B	A	A	A	B	A	A	A	A	R165 / d11-S130 / t3.5-d24×50
165	d 11	130	3.5	32×58		B	A	B		B	B	A	A	R165 / d11-S130 / t3.5-d32×58
165	d 11	130	4	32×58		B	A	B		B	B	A	A	R165 / d11-S130 / t4-d32×58
215	d 14	130	4	32×60		C	B	C		B	B	A	A	R215 / d14-S130 / t4-d32×60
215	d 14	130	4	38×60		C	B	C		B	B	A	A	R215 / d14-S130 / t4-d38×60
190	d 11	155	3	32×60		B	B	B		B	B	A	A	R190 / d11-S155 / t3-d32×60
190	d 11	155	3	35×60		B	B	B		B	B	A	A	R190 / d11-S155 / t3-d35×60
215	d 13.5	180	4	28×60		C	B	C		B	B	A	A	R215 / d13.5-S180 / t4-d28×60
215	d 13.5	180	4	38×80		C	B	C			C	B	A	R215 / d13.5-S180 / t4-d38×80
215	d 14	180	4	28×42		C	B	C		B	A	A	A	R215 / d14-S180 / t4-d28×42
215	d 14	180	4	28×60		C	B	C		B	B	A	A	R215 / d14-S180 / t4-d28×60
215	d 14	180	4	32×58		C	B	C		B	B	A	A	R215 / d14-S180 / t4-d32×58
215	d 14	180	4	32×60		C	B	C		B	B	A	A	R215 / d14-S180 / t4-d32×60
215	d 14	180	4	32×80		C	B	C			C	B	A	R215 / d14-S180 / t4-d32×80
215	d 13.5	180	4	38×80		C	B	C			C	B	A	R215 / d13.5-S180 / t4-d38×80
265	d 13	230	4	38×80			B				C	B	A	R265 / d13-S230 / t4-d38×80
265	d 14	230	4	55×110									B	R265 / d14-S230 / t4-d55×110
300	d 18	250	5	42×110								C	B	R300 / d18-S250 / t5-d42×110
300	d 18	250	5	48×82								B	A	R300 / d18-S250 / t5-d48×82
300	d 18	250	5	48×110								C	B	R300 / d18-S250 / t5-d48×110
300	d 19	250	5	48×110								C	B	R300 / d19-S250 / t5-d48×110

* On request

Calculate your planetary gearbox

This outline enables you to select your gearbox quickly. If you know which motor you will be using, you can create a preliminary design for your application.

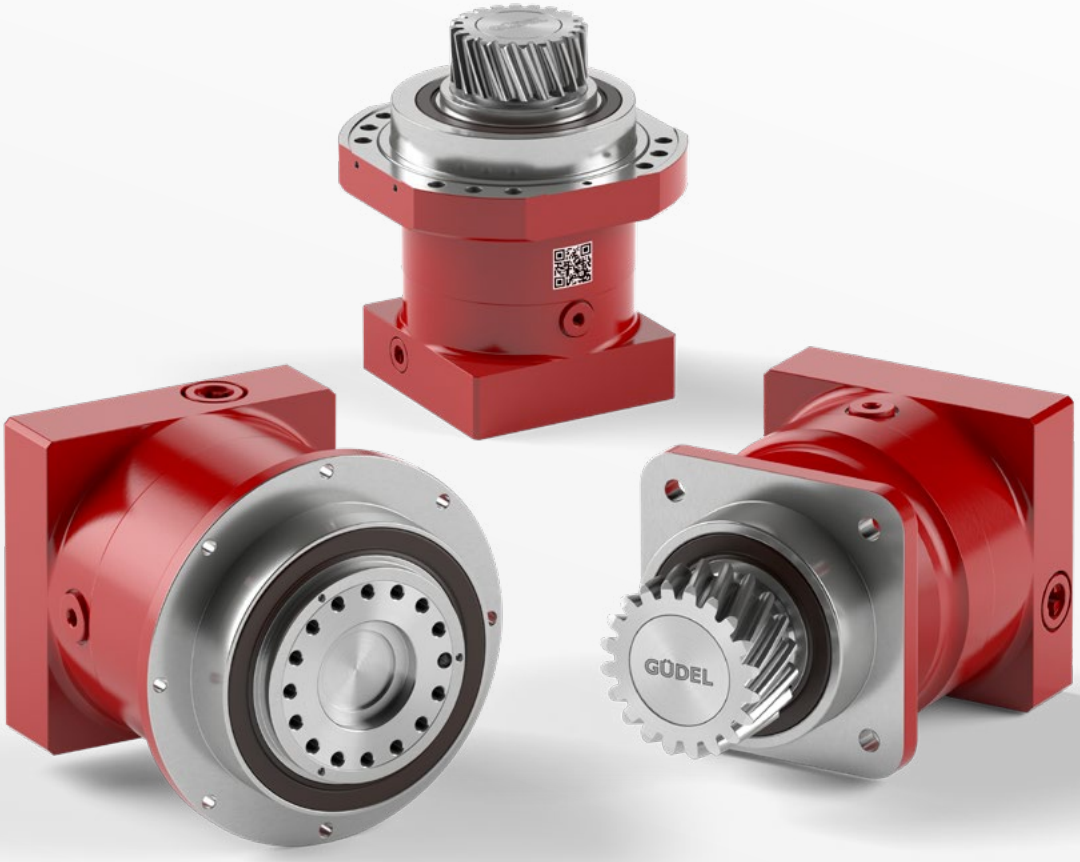

Quick selection

ED	Duty cycle
$T_{max\,mot}$	Max. acceleration motor torque
i	Reduction ratio
$T_{1n\,mot}$	Nominal motor torque

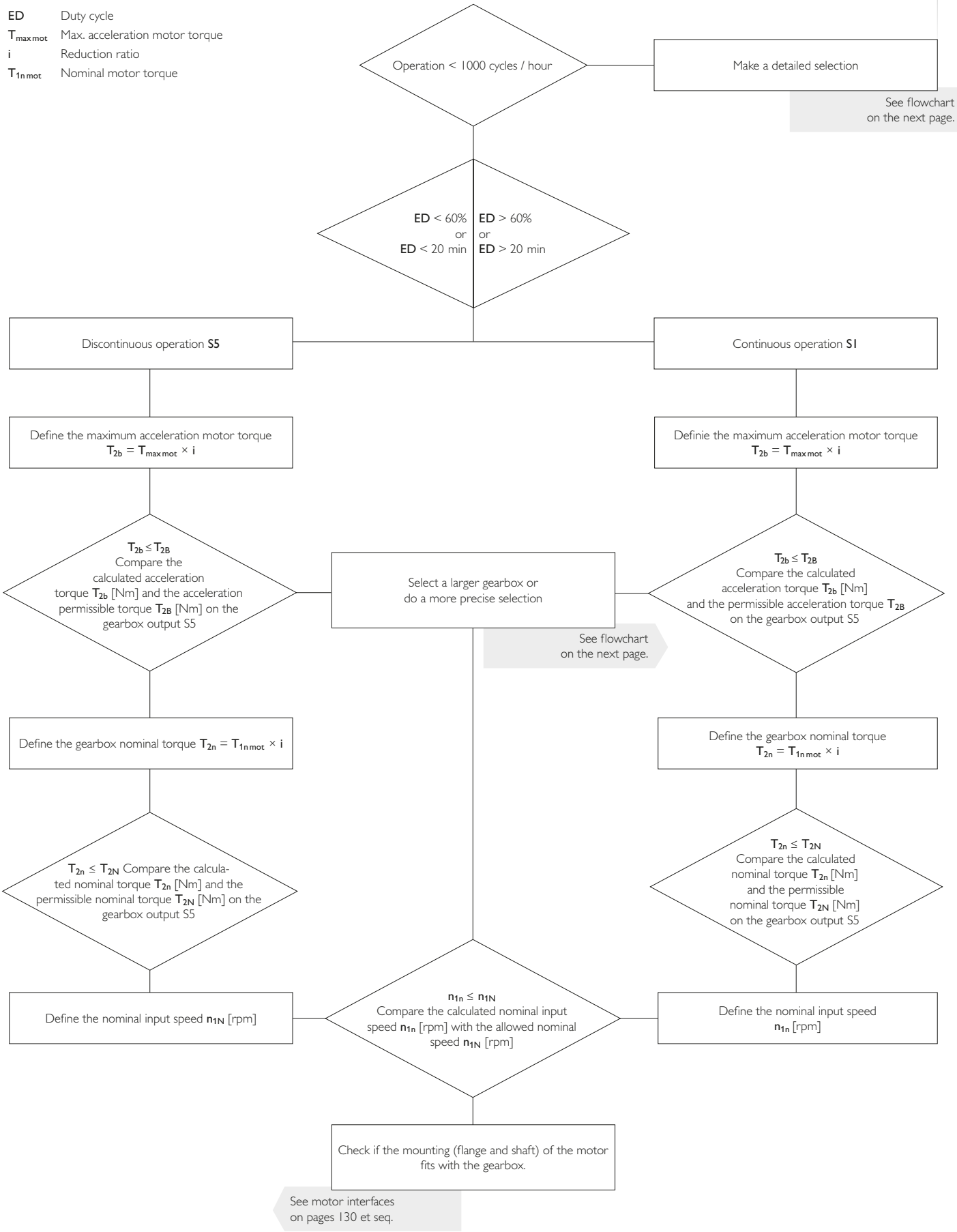

$ED = (t_b + t_c + t_d) / (t_b + t_c + t_d + t_e) \times 100\,\%$

$ED = t_b + t_c + t_d$ [min]

Calculation of the duty cycle **ED**

ED < 60% or **ED** < 20 min | **ED** > 60% or **ED** > 20 min

Cyclic operation **S5**

Continuous operation **S1**

$Z_h = \dfrac{3600\ [s/h]}{(t_b + t_c + t_d + t_e)}$

Define the number of cycles Z_h [1/h]

F depends on Z_h (see Board 1)

Define the service factor (see Board 1) f_s

T_{2b} under application

$T_{2bfs} = T_{2b} \times f_s$

Define the max. acceleration torque on the output, service factor included T_{2bfs} [Nm]

$T_{2bfs} < T_{2B}$ — No → Select a larger gearbox

n_{2max} under application

Define the max. output speed (see diagram 1) n_{2max} [rpm]

i depends on:

- **n** Necessary output rotation speed (under application)
- **Λ** Depending on inertia ratio, indicative value: $1 \leq \Lambda \leq 10$
  - $n_{1max} = n_{2max} \times i$
  - $n_{1max} = n_{1maxmot}$
- **T** Depending on the output torque and the driving torque
  - $T_{1b} = T_{2b} \times (1/i) \times (1/\eta)$
  - $T_{1b} < T_{maxmot}$

Define the reduction ratio **i**

$n_{1max} < n_{1Max}$ — No → Select smaller reduction ratio **i**

T_{2not} under application

Define the emergency torque T_{2not} [Nm]

$T_{2not} < T_{2Not}$ — No → Select a larger gearbox

$$T_{2m} = \sqrt[3]{\frac{|n_{2b}| \times t_b \times |T_{2b}|^3 + ... + |n_{2n}| \times t_n \times |T_{2n}|^3}{|n_{2b}| \times t_b + ... + |n_{2n}| \times t_n}}$$

$$n_{2m} = \frac{|n_{2b}| \times t_b + ... + |n_{2n}| \times t_n}{t_b + ... + t_n}$$

including dwell

$$n_{1m} = n_{2m} \times i$$

$D_{W.Mot} < D_{tightening\ hub}$

The motor shaft should be inserted a good distance into the tightening hub.

The motor shaft should be inserted a good distance into the tightening hub without effort.

$$T_{2max\,mot} = T_{1max\,mot} \times i \times \eta$$

When the engine is under full load, the gear must not be damaged. In the case of damage, limit the motor current.

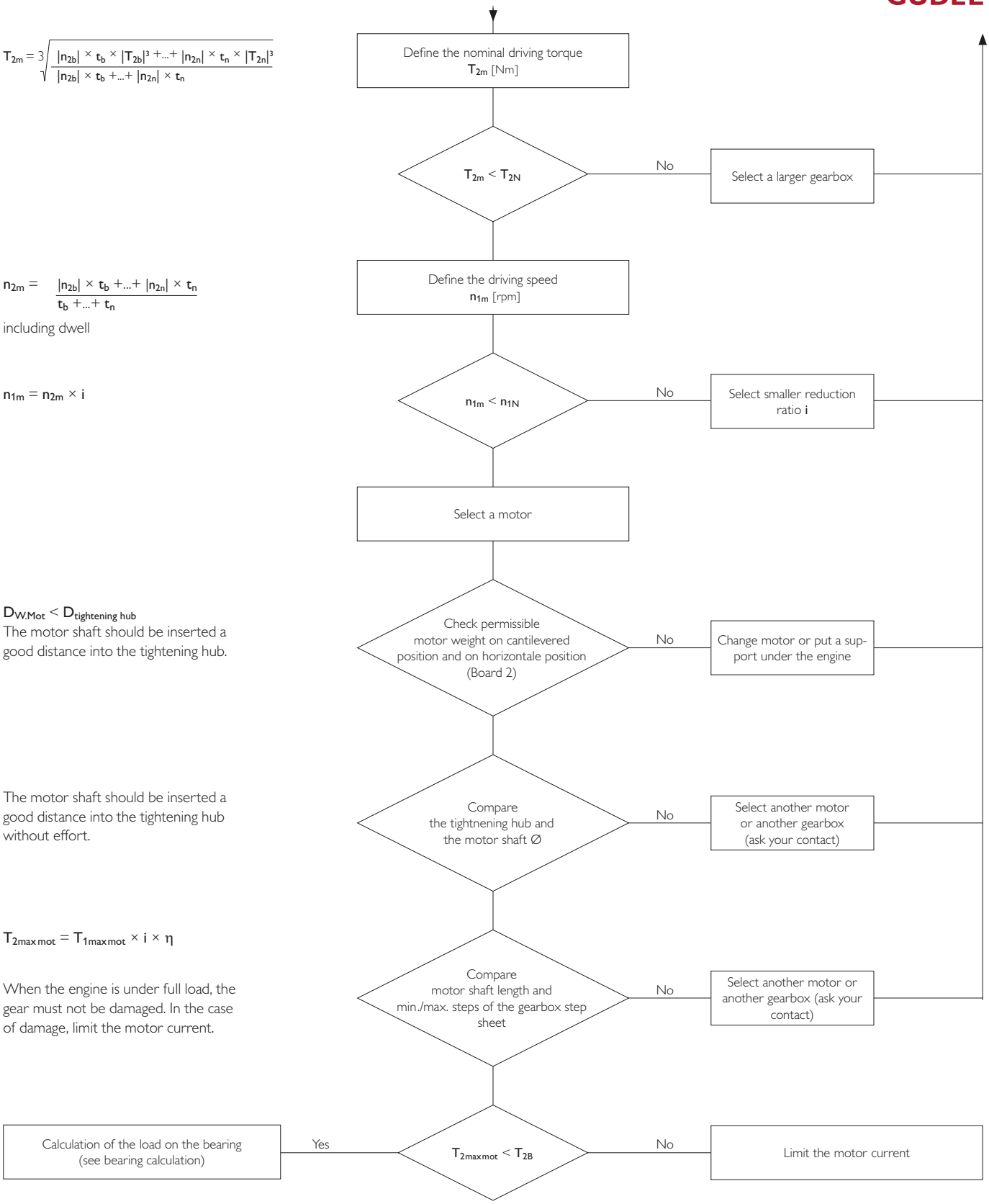

Diagram 1

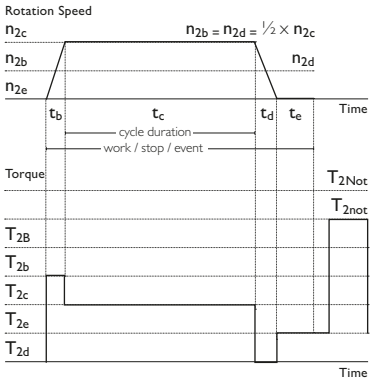

Board 1

Number of cycles p. h.	Z_h	[1/h]	1000	1500	2000	3000	4000	5000	6000	7000	8000	9000	10000
Shock factor	f_s	[-]	1	1.1	1.3	1.6	1.72	1.8	1.9	1.95	2	2.05	2.07

Board 2

Size	080	100	140	180	240
Max. motor weight	9.3	20	37	74	150

Calculate your ideal drive train

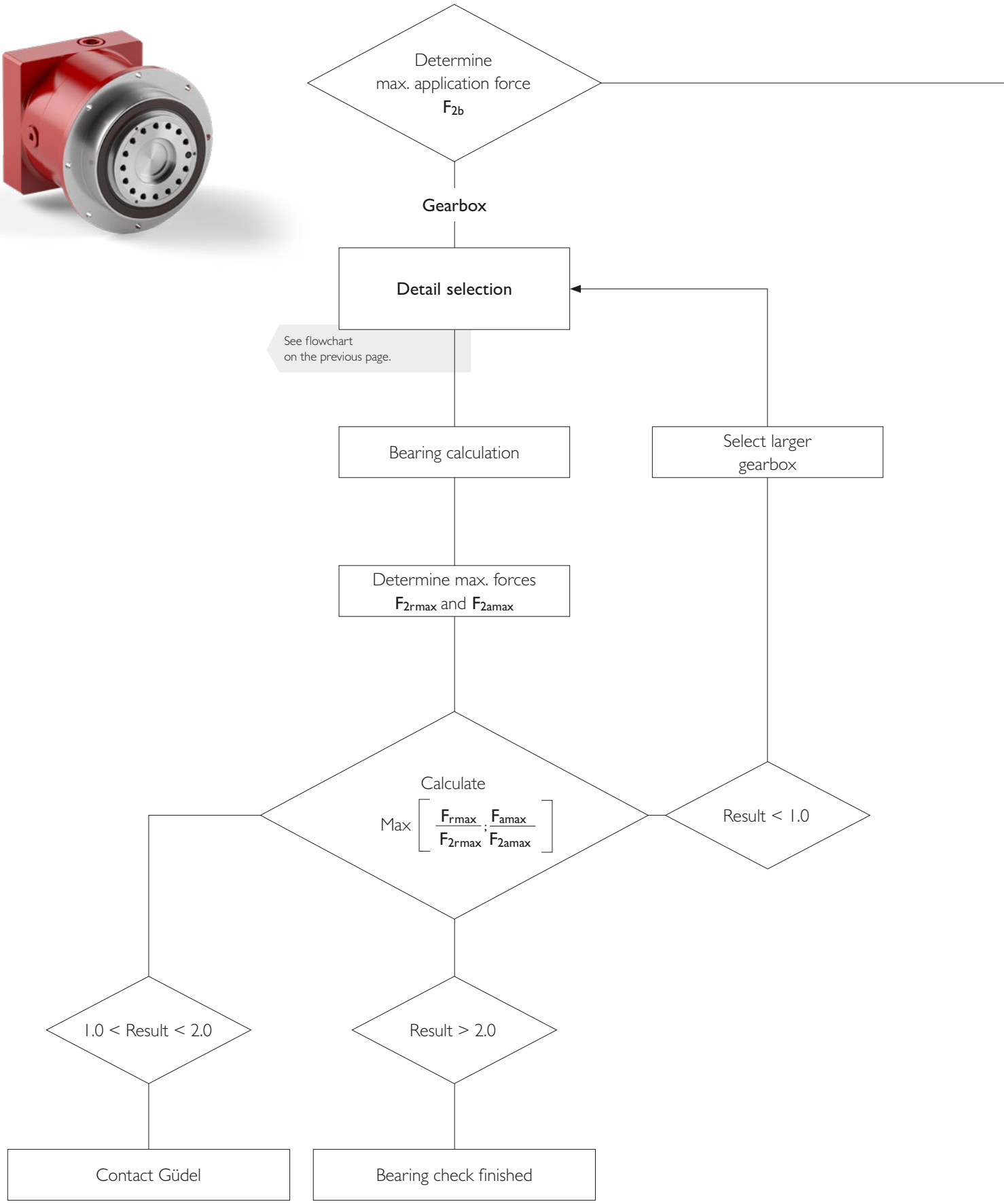

Function package selection

Rack and pinion

Determine operation mode factor
f_l

Pulsating load (one direction)
$f_l = 1.0$

Alternating load (bi-directional)
$f_l = 1.45$

Determine lifetime factor
f_c

Load cycles ≤ 1*10^6
$f_c = 1.0$

Virtually unlimited lifetime
Rack Q6 $f_c = 1.35$
Rack Q9 $f_c = 1.50$
Rack Q7 $f_c = 2.00$

Application-specific factor *
f_s

* Based on experience 1 to 4
Recommendation: $f_s > 1.5$
For further information, please contact Güdel

Define max. acceleration force **
$F_{2b}f$

** $F_{2b}f = F_{2b} \times f_l \times f_c \times f_s$

Select rack

See technical datasheets **your ideal drive train** on pages 121 et seq.

$F_{2b}f < F_{2B}$

No

Select a larger rack

Select the matching pinion for the selected rack

See technical datasheet **your ideal drive train** on page 120.

Güdel worldwide

GÜDEL

Contacts

Europe

Switzerland
Güdel Group AG (Headquarters)
Gaswerkstrasse 26
4900 Langenthal
Phone +41 62 916 9191
info@ch.gudel.com

Güdel AG
Gaswerkstrasse 26
4900 Langenthal
Phone +41 62 916 91 91
info@ch.gudel.com

Austria
Güdel GmbH
Schöneringer Strasse 48
4073 Wilhering
Phone +43 7226 206900
info@at.gudel.com

Netherlands
Güdel AG
Eertmansweg 30
7595 PA Weerselo
Phone +31 541 66 22 50
info@nl.gudel.com

Czech Republic
Güdel a.s.
Holandská 4
63900 Brno
Phone +420 519 323 431
info@gudel.cz

France
Güdel SAS
Tour de l'Europe 213
3 Bd de l'Europe
68100 Mulhouse
Phone +33 1 30091545
info@fr.gudel.com

Güdel Sumer SAS
Le Roqual
Zone industrielle
Carsac-Aillac
24200 Sarlat-la-Canéda
Phone +33 5 53 30 30 80
info@gudel-sumer.com

Germany
Güdel Germany GmbH
(German Headquarters)
Industriepark 107
74706 Osterburken
Phone +49 6291 6446 0
info@de.gudel.com

Güdel Germany GmbH (Altenstadt)
Carl-Benz-Strasse 5
63674 Altenstadt
Phone +49 6047 9639 0
info@de.gudel.com

Güdel Germany GmbH (Nördlingen)
Industriestrasse 8
86720 Nördlingen
Phone +49 9081 2974 0
info@de.gudel.com

Güdel Germany GmbH (Ainring)
Gewerbestrasse 4a
83404 Ainring
Phone +49 8654 4888 0
info.gudel-controls@de.gudel.com

Güdel Intralogistics GmbH
Gewerbegebiet Salzhub 11
83737 Irschenberg
Phone +49 8062 7075 0
intralogistics@de.gudel.com

Italy
Güdel S.r.l.
Via per Cernusco, 7
20060 Bussero (Mi)
Phone +39 02 9217021
info@it.gudel.com

Poland
Güdel Sp. z o.o.
ul. Legionów 26/28
43-300 Bielsko - Biała
Phone +48 33 819 01 25
info@pl.gudel.com

Russia
Güdel AG
Yubileynaya 40
Office 1902
445057 Togliatti
Phone +7 917 975 0802
info@ru.gudel.com

Spain
Güdel AG
C/Industria 60, Local 7
08025 Barcelona
Phone +34 93 476 03 80
info@es.gudel.com

United Kingdom
Güdel Lineartec (U.K.) Ltd.
Unit 5 Wickmans Drive
Banner Lane
CV4 9XA Coventry, West Midlands
Phone +44 24 7669 5444
info@uk.gudel.com

Americas

Brazil
Güdel Lineartec
Comércio de Automção Ltda.
Rua Américo Brasiliense
n° 2170, cj. 506
Chácara Santo Antonio
São Paulo, CEP 04715 - 005
Phone +41 62 916 9191
info@ch.gudel.com

Mexico
Güdel TSC S.A. de C.V.
Gustavo M. Garcia 308
Col. Buenos Aires
Monterrey, N.L. 64800
Phone +52 81 8374-2500
info@mx.gudel.com

USA
Güdel Inc.
4881 Runway Blvd.
Ann Arbor, MI 48108
Phone +1 734 214 0000
info@us.gudel.com

Asia Pacific

China
Güdel International Trading Co. Ltd.
Block A, 8 Floor, C2 BLDG
No. 1599 New Jin Qiao Road
Pudong
Shanghai 201206
Phone +86 21 5055 0012
info@cn.gudel.com

India
Güdel India Pvt. Ltd.
Gat no. 458-459
Mauje Kasar Amboli
Pirangut, Tal.Mulshi
Pune 412 111
Phone +91 20 67910200
info@in.gudel.com

South Korea
Güdel Lineartec Inc.
11-22 Songdo-dong
Yeonsu-Ku
Post no. 406-840
Incheon City
Phone +82 32 858 0541
info@kr.gudel.com

Taiwan
Güdel Lineartec Co. Ltd.
No. 99, An-Chai 8th St.
Hsin-Chu Industrial Park
30373 Hu-Ko, Hsin-Chu
Phone +88 635 97 8808
info@tw.gudel.com

Thailand
Güdel Lineartec Co. Ltd.
19/28 Private Ville Hua Mak Road
Hua Mak Bang Kapi
Bangkok 10240
Phone +66 2 374 0709
info@th.gudel.com

© Güdel AG

We have taken the greatest care in compiling this catalog with specifications and technical information. Please understand that we accept no liability for misprints, technical changes, or consequential damage in relation to the published information. The catalog is purely for information purposes, so the illustrations and information in no way represent guaranteed properties. The text, photos, drawings, and any other display formats in this catalog are intellectual property of Güdel AG. Please note that any duplication, editing, translation, saving, or any other subsequent use of the catalog or its components in print or electronically may only be carried out with the previous, express consent of Güdel AG. Güdel AG reserves the right to modify the provided information at any time in order to always be able to present you with the most up-to-date version of our catalog and products.

GÜDEL

Güdel AG
Gaswerkstrasse 26
4900 Langenthal
Switzerland
Phone +41 62 916 91 91
info@ch.gudel.com
gudel.com

EN | 02.18 | 1040993 I